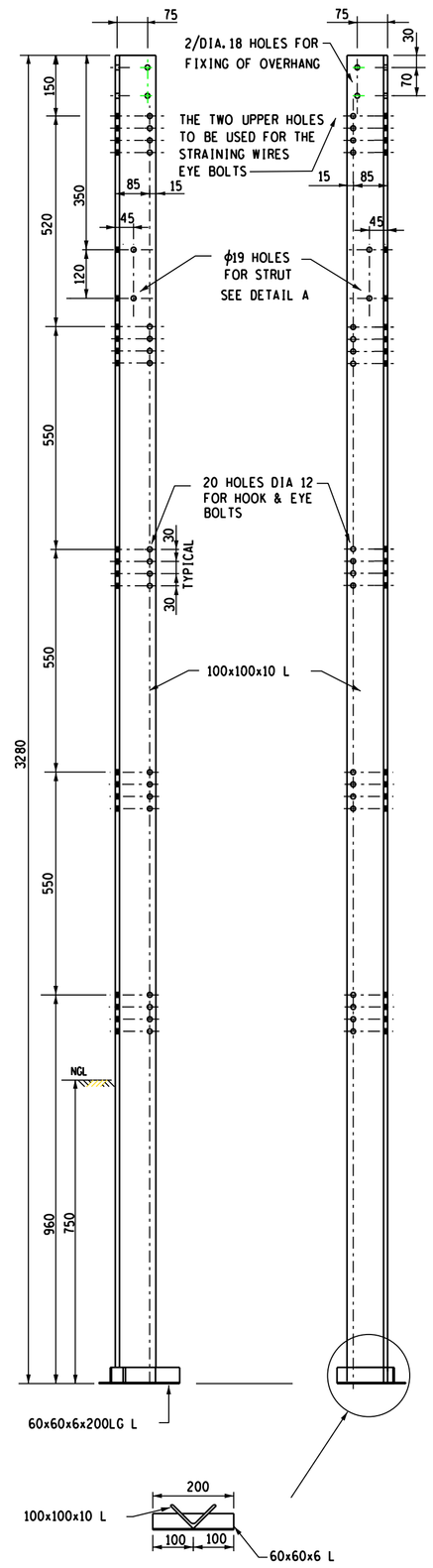

CORNER POST

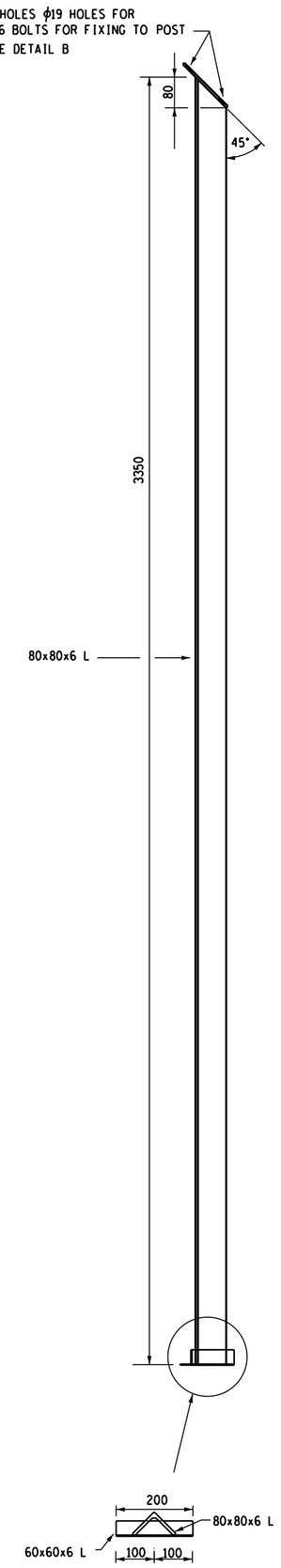

STRUT

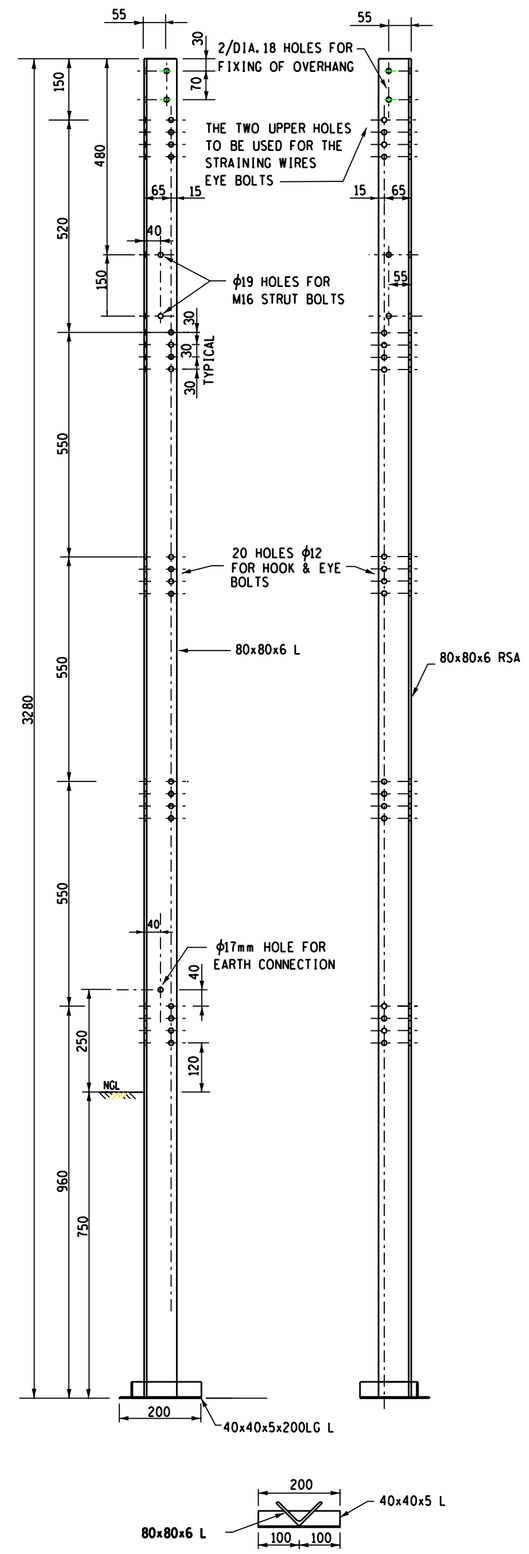

INLINE STRAIN POST

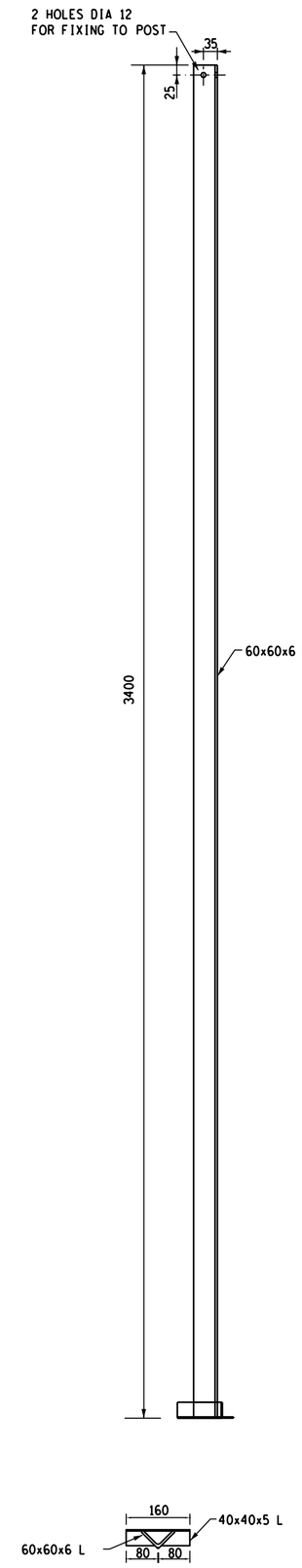

STRUT

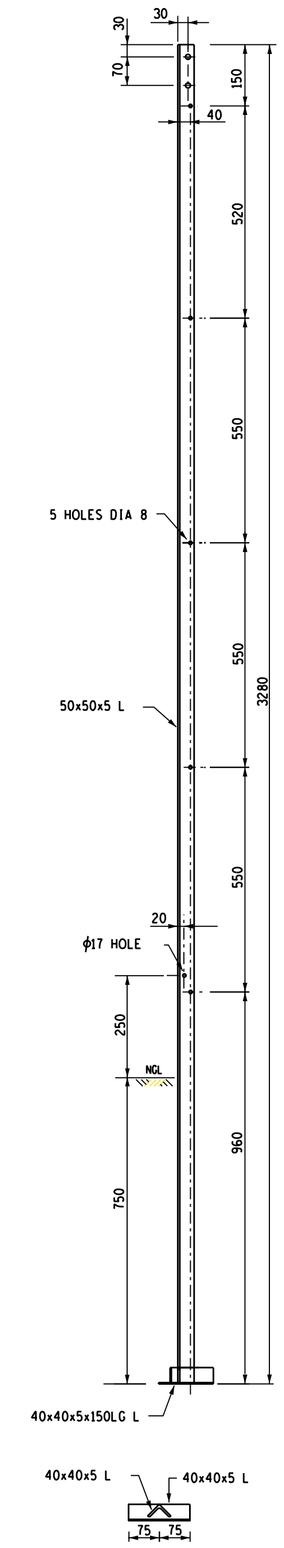

INTERMEDIATE POST

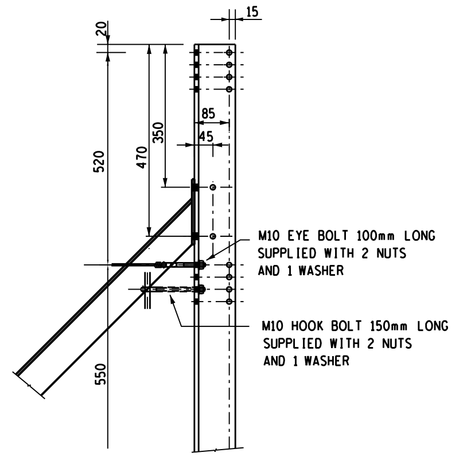

PART ELEVATION

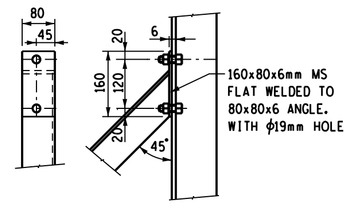

DETAIL A

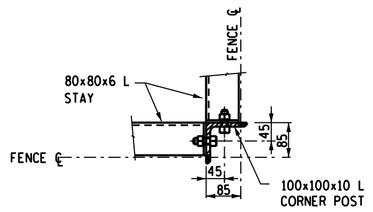

PLAN ON OUTSIDE CORNER

SCALE 1:2

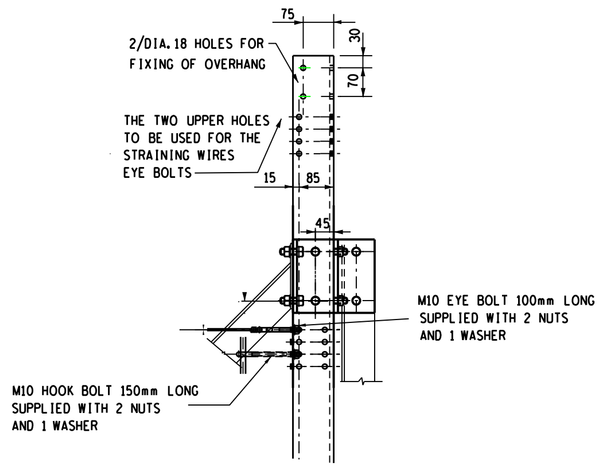

PART ELEVATION

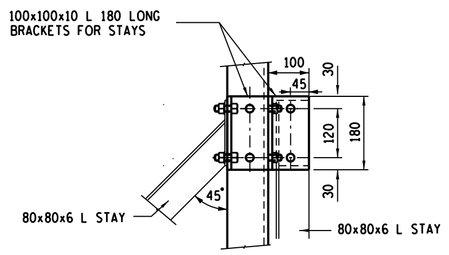

DETAIL B

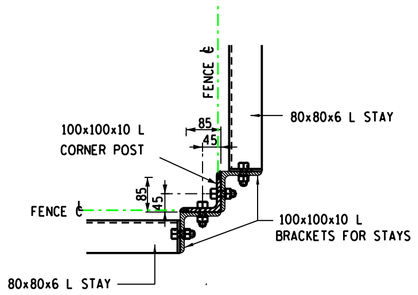

PLAN ON INSIDE CORNER

NOTES:

1. INTERMEDIATE POSTS SPACED 4,0m MAX.
2. STRAIN POSTS SPACED MAX. 40,0m APART
3. ALL POSTS, STRUTS, ANGLES, BOLTS, NUTS, STRAIN BOLTS, HOOKS, ETC TO BE HOT DIPPED GALVANISED AFTER FABRICATION TO SABS ISO 1461
4. WELD MESH BURIED 300mm INTO THE GROUND
5. ALL BOLTS AND NUTS TO COMPLY WITH SABS ISO 1461
6. EYE BOLTS AND HOOK BOLTS TO BE ERECTED WITH MAX. PULL UP AVAILABLE FOR SUBSEQUENT TENSION OF SAGGED STRAIN WIRES.

REV	AUTH MAG	DATE DATUM	REVISION/REVISIES INDEX REF/INDEKSVERW	BY DEUR	CHKD NAGES	REFERENCE DRAWINGS VERWYSINGSTEKENINGE
3	DJC.S	06/06	DRG TITLE & SHEET REVISED	PND	DBH	SHT 2 WELDMESH TERM. & FIX DTLS
2	DJC.S	11/11	DETAIL FOR OUTSIDE CORNER POST STRUT ADDED	PVC		SHT 3 OVERHANG BRACKETS DTLS
1	DJC.S	09/02	CORNER POST STRUT CHANGED & DETAILS ADDED	DJC.S		SHT 4 POST CONC BASE
0			FIRST ISSUE / EERSTE UITREIKING			SHT 5 ACCESS GATE DTLS
						SHT 6 ACCESS GATE POSTS
						SHT 7 GATE KEEP & WIRING

DRG.TEK REGISTR

Eskom Transmission

©

SECURITY FENCE WITH OVERHANG

2,4m HIGH SECURITY FENCE WITH OVERHANG

POSTS AND STRUTS DETAIL

CHKD NAGES: DBJN. 15/01 2001

DRAWN DETEKEN: DBJN. 15/01 2001

SCALE SKAAL:

APPROVED DJC.SENEKAL 17/01/01

GOEDGEKEUR

0.54/5633

SHT 1 OF 7

REV 3

SIZE GROOTTE A0L