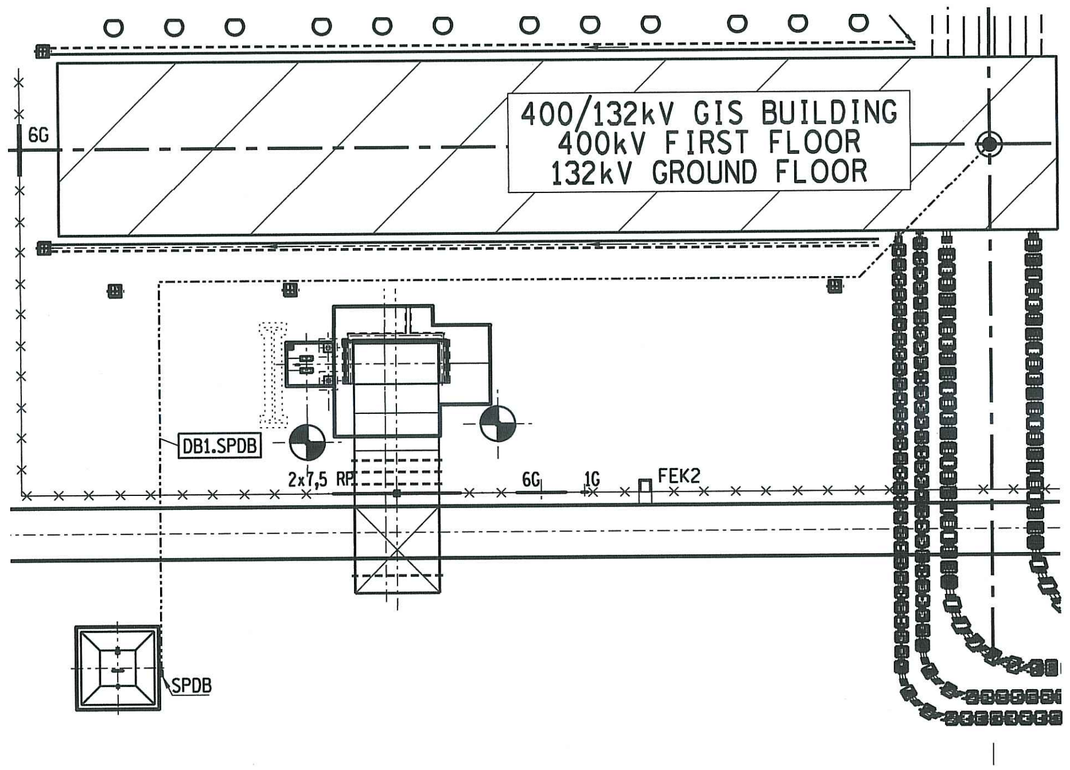

NOTES :

1. ELECTRICAL INSTALLATION WORK SHALL BE IN ACCORDANCE WITH:
   - SANS 10142
   - SANS 10198
2. THE POWER CABLE SHALL RUN FROM CONTROL BUILDING DB1
3. WHEN LEAVING OPEN CABLE TRENCH, THE SUPPLY CABLE SHALL PASS BELOW THE TRENCH WALL FOUNDATION.
4. POWER CABLES FOLLOWING ROUTES OUTSIDE THE OPEN CABLE TRENCH SHALL BE BURIED AT A MINIMUM OF 500mm BELOW THE SURFACE.
5. CABLE ROUTE MARKERS SHALL BE USED TO INDICATE ROUTE DEVIATIONS FOR BURIED CABLES IN ACCORDANCE WITH DRG. 0.00/1286.
6. POWER CABLES SHALL BE LABELLED IN ACCORDANCE WITH DRG. 0.00/1310. CABLE NUMBERS ARE INDICATED ON DRAWING AND IN SCHEDULE (SEE DETAIL 'C')
7. SWITCH DISCONNECTOR SHALL BE WALL MOUNTED 0,5m ABOVE GROUND LEVEL IN AN IP65 DISTRIBUTION BOX FOR SUBMIRSABLE PUMP.
8. SPDB 400/230V AC SHALL COMPLY WITH THE FOLLOWING:-
   - MATERIAL SHALL BE 3CR12 POWDER COATED ORANGE ENCLOSURE
   - BE POLE MOUNTED AT POSITION SHOWN
9. CABLE FROM SPDB TO SUMP TO BE INSTALLED WITHIN GALVANISED CONDUIT.

CABLE SCHEDULE FOR PRESSURE PUMP INSTALLATION

CABLE No.	CABLE TYPE	FROM	TO	ESTIMATED LENGTH (m)	ACTUAL LENGTH(m)
DB1.SPDB	BVX4GCV	DB1	SPDB	450	

DETAIL 'C'

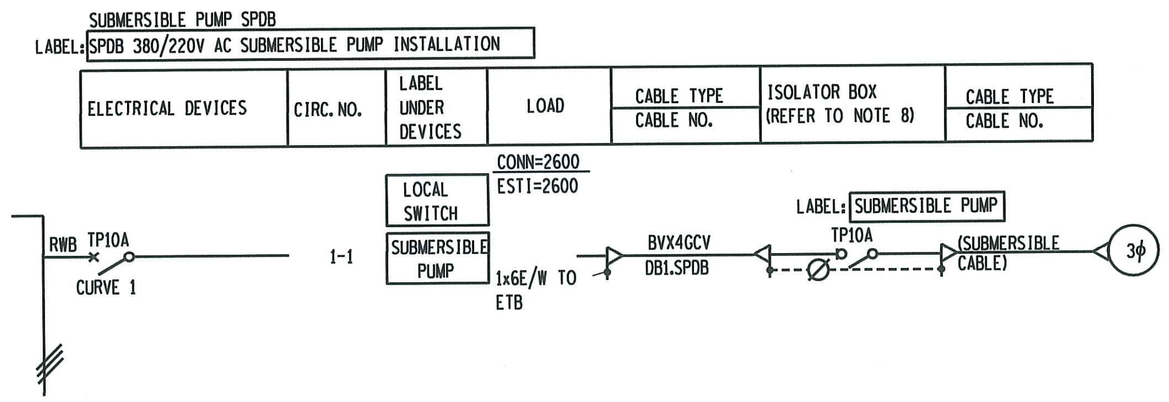

REV	REVISION DESCRIPTION	DRAWN	CHKD	AUTH	DATE	REFERENCE DRAWINGS

APPROVED BY — DATE 18/9/2017
CHECKED BY — DATE 18/9/2017
DRAWN BY — DATE 18/9/2017
SCALE AS SHOWN

Eskom

Eskom Holdings SOC Ltd
Reg No 2002/015527/30

WESKUSFLEUR

OILDAM
SUBMERSIBLE PUMP
ELECTRICAL INSTALLATION

©

WKoe11P01-SE-D60

SHEET NUMBER: 0
REVISION: 0

SIZE GROOTTE A1L