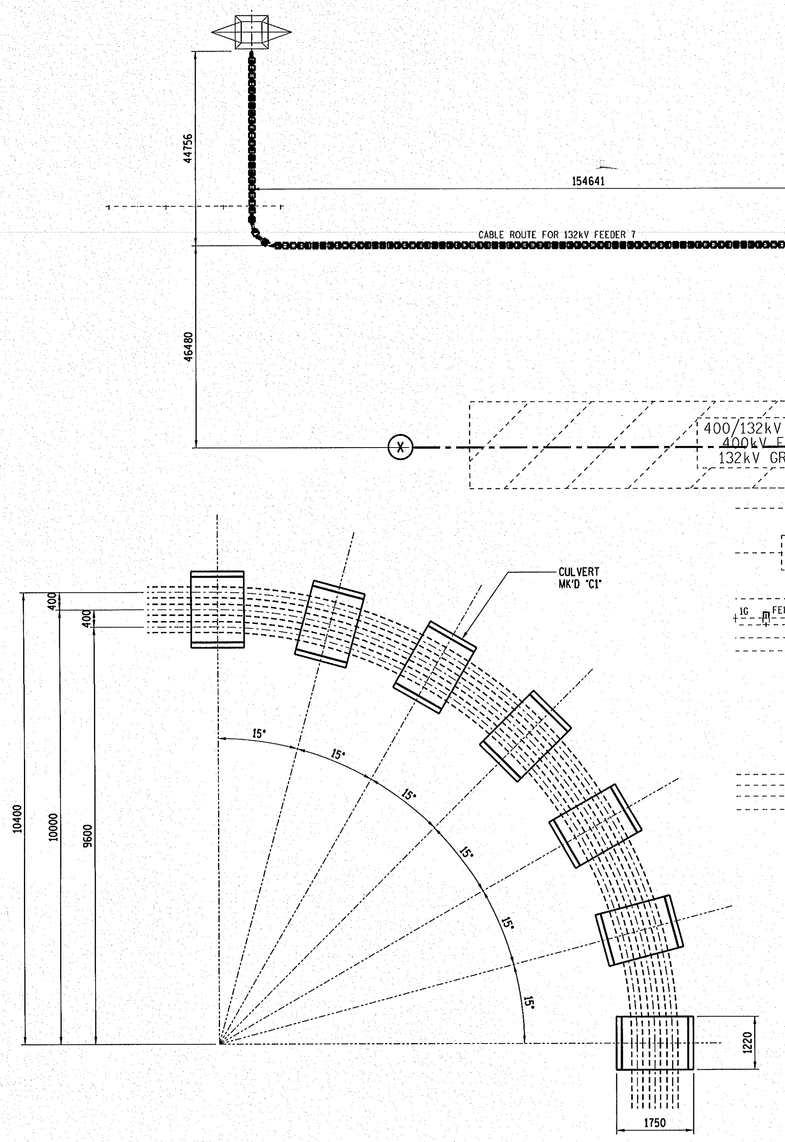

TYPICAL 250 DIA CABLE CULVERT 90° BEND

SCALE 1:10

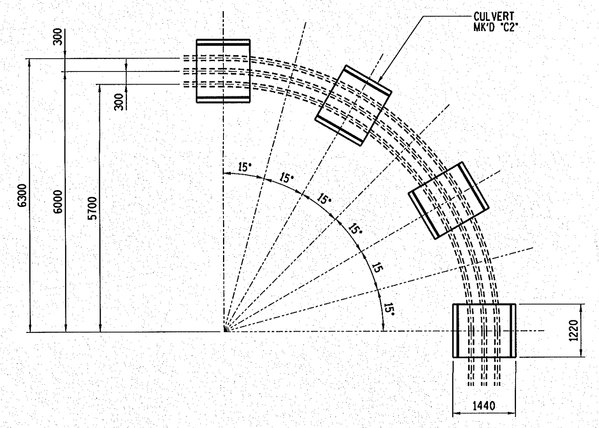

TYPICAL 110 DIA CABLE CULVERT 90° BEND

SCALE 1:10

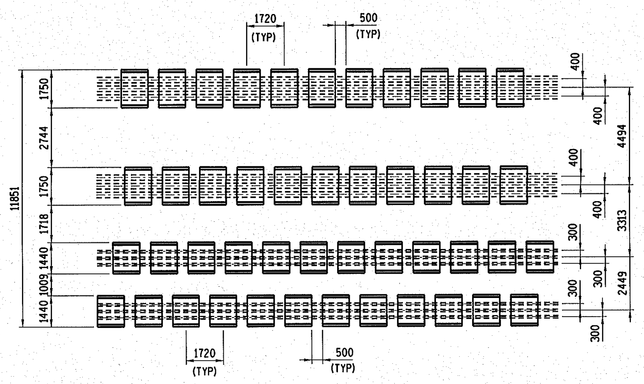

ENLARGED DETAIL1

SCALE 1:5

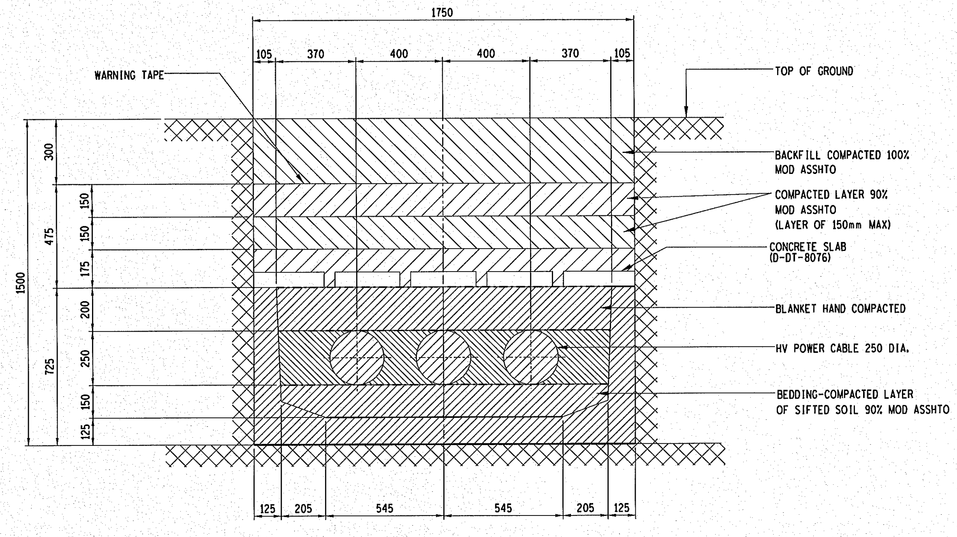

TYPICAL SECTION THRU 250 DIA CABLE CULVERT MK'D "C1"

SCALE 1:50

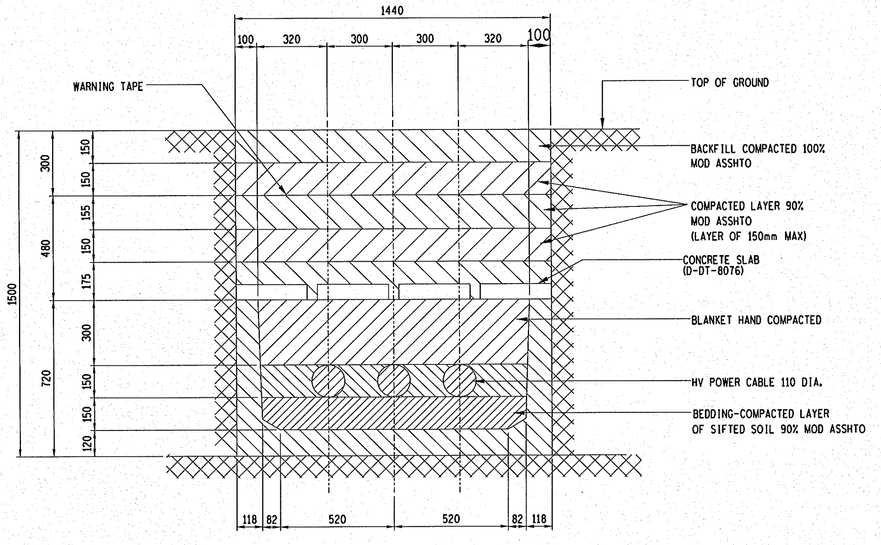

TYPICAL SECTION THRU 110 DIA CABLE CULVERT

SCALE 1:50

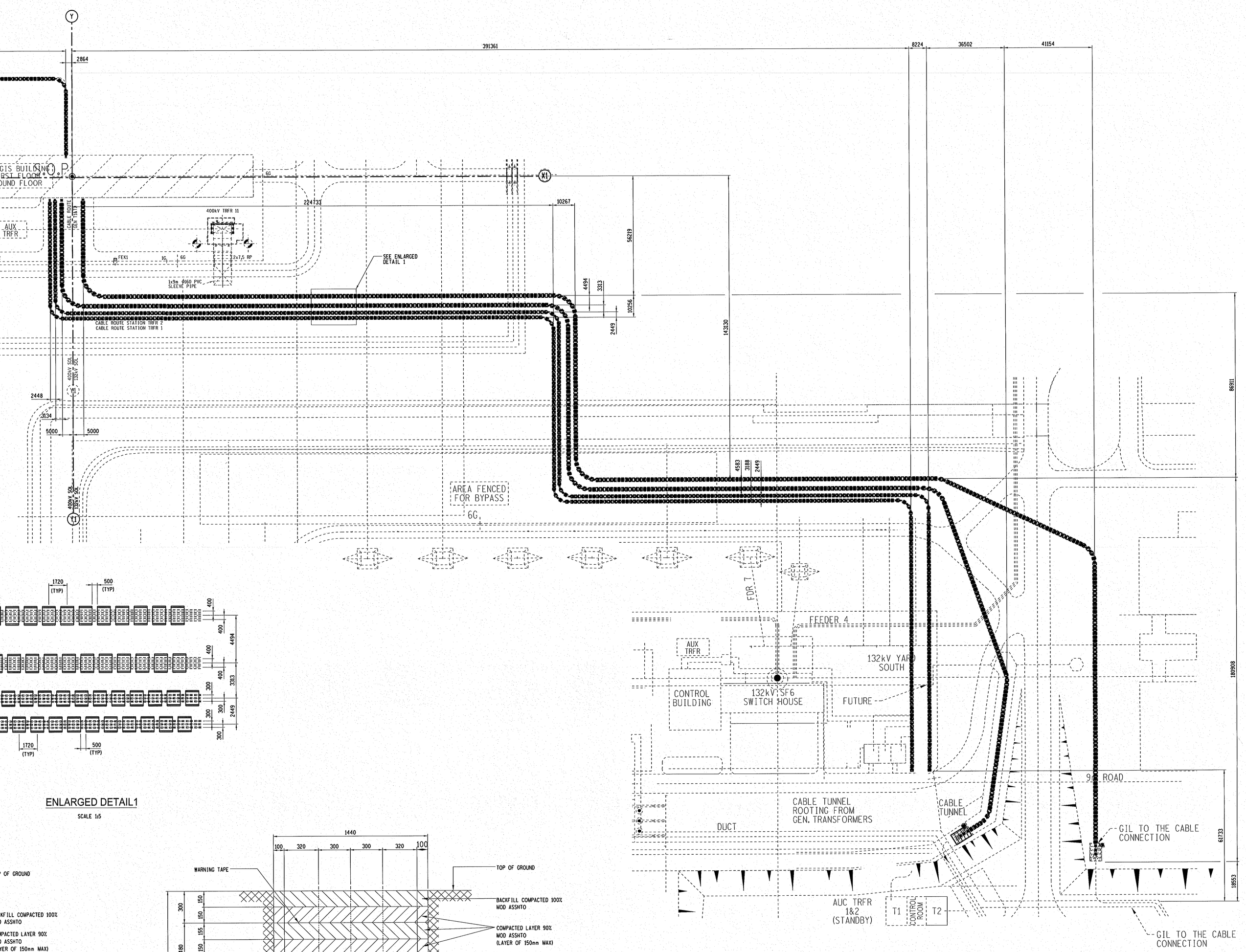

GENERAL LAY-OUT ON CABLE WITH CULVERT

SCALE 1:1

NOT FOR CONSTRUCTION

ISSUE DATE:

REV	REVISION DESCRIPTION	DRAWN	CHKD	AUTH	DATE	REFERENCE DRAWINGS
0	FIRST ISSUE					D54 GEN-1 GIL/CABLE
						D55 GEN-2 GIL/CABLE
						D56 GE-1&GEN-2 GIL/CABLE

APPROVED BY: A. Mandi
DATE 12/7/2017
CHECKED BY: B. Sandel
DATE 12-7-2017
DRAWN BY: Wiseman Mokhehle
DATE 12-07-2017
SCALE AS SHOWN

Eskom

Eskom Holdings SOC Ltd
Reg No 2002/015527/30

WESKUSFLUER

GENERAL LAY-OUT OF CULVERTS

OPTION-1

Wkoe11P01-SE-D57

SHEET NUMBER 1 REVISION 0

SIZE GROOTTE A0L