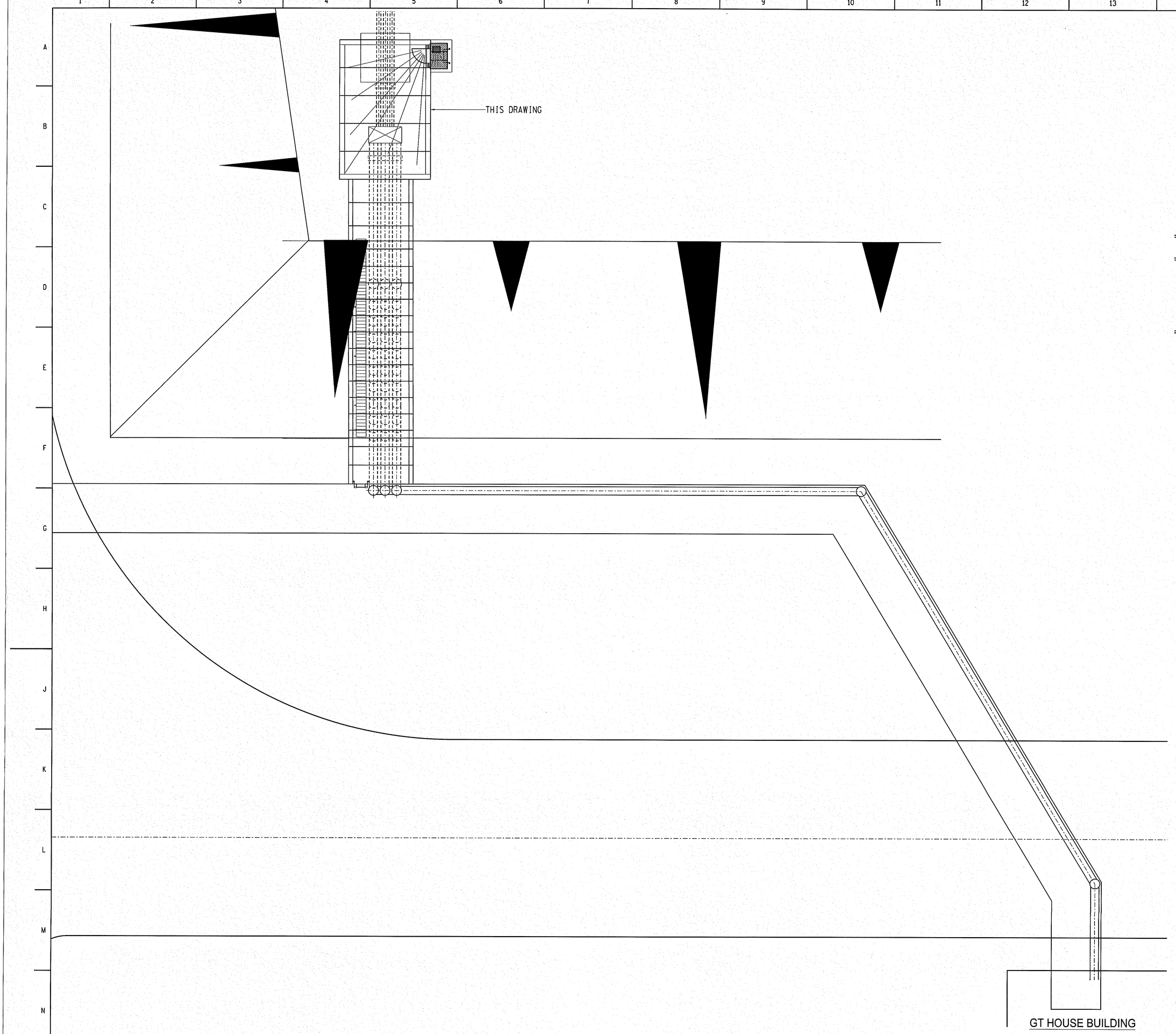

GT HOUSE BUILDING

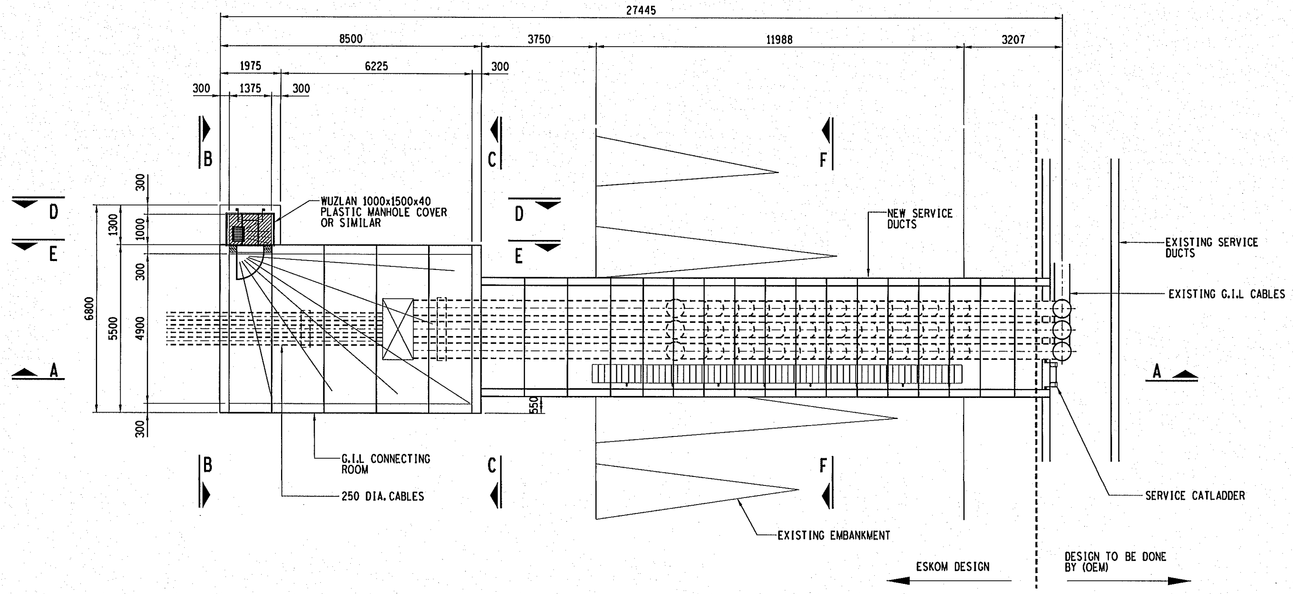

PLAN ON G.I.L TWO CABLE CONNECTION HOUSE

SCALE 1:1

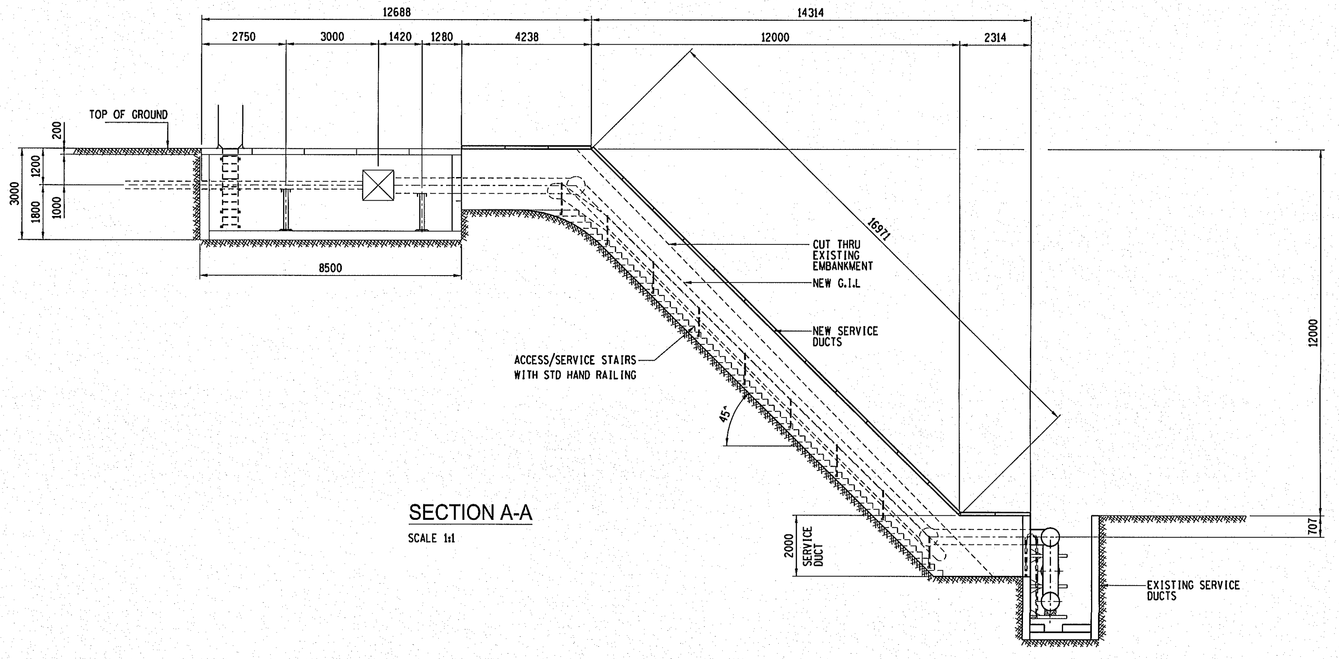

SECTION A-A

SCALE 1:1

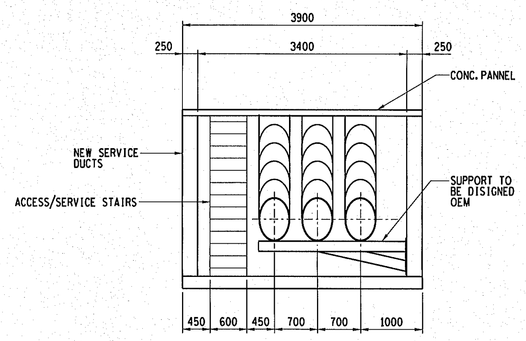

VIEW F-F

SCALE 1:2

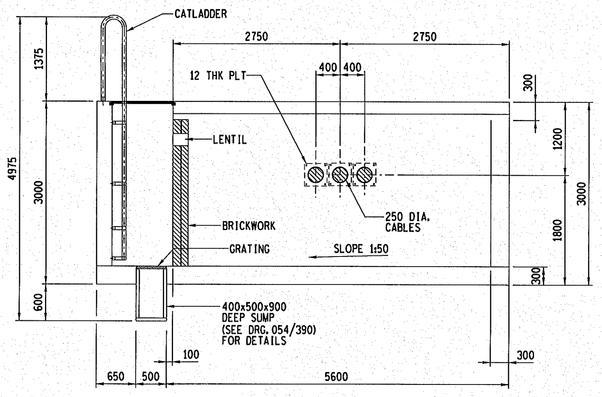

VIEW B-B

SCALE 1:2

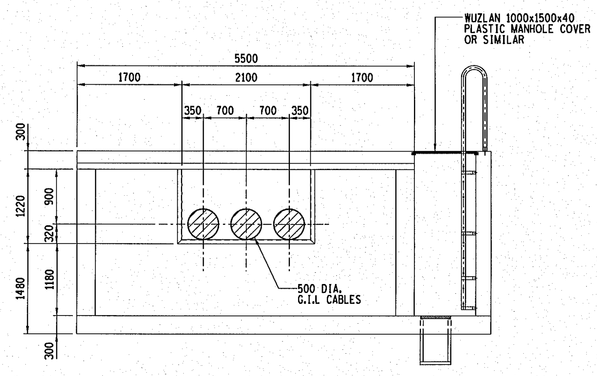

VIEW C-C

SCALE 1:2

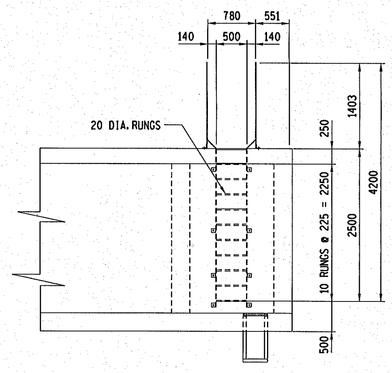

SECTION D-D

SCALE 1:2

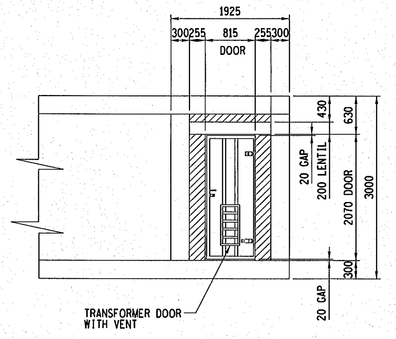

SECTION E-E

SCALE 1:2

NOT FOR CONSTRUCTION

ISSUE DATE:

REV	REVISION DESCRIPTION	DRAWN	CHKD	AUTH	DATE	REFERENCE DRAWINGS
0	FIRST ISSUE					

D54	GEN-1 GIL/CABLE
D56	GEN-1&GEN-2 GIL/CABLE
D57	CULVERTS LAYOUT

APPROVED BY: A. Marali — DATE 12/07/2017

CHECKED BY: D. Bendal — DATE 12.7.2017

DRAWN BY: WISEMAN MOKHEHLE — DATE 12/07/2017

SCALE AS SHOWN

Eskom

Eskom Holdings SOC Ltd
Reg No 2002/015527/30

WESKUSFLUER

GEN-2 GIL TO CABLE CONNECTION
LAYOUT AND DETAILS
OPTION-1A

©

Wkoe11P01-SE-D55

SHEET NUMBER: 1 — REVISION: 0

SIZE GROOTTE A0L