SECURITY LIGHTING DISTRIBUTION BOARD 1

400/230V AC MAIN BOARD	CABLE TYPE / CABLE No	LOCAL SWITCH	SECURITY LIGHTING DISTRIBUTION BOARD: PHASES	PROTECTION & CONTROL DEVICES	CABLE/CONDUCTOR & CONDUIT SIZE	CCT No	LOAD	CABLE TYPE / CABLE No	POLE TERMINATION BOARD	WIRING	LUMINAIRE LABEL

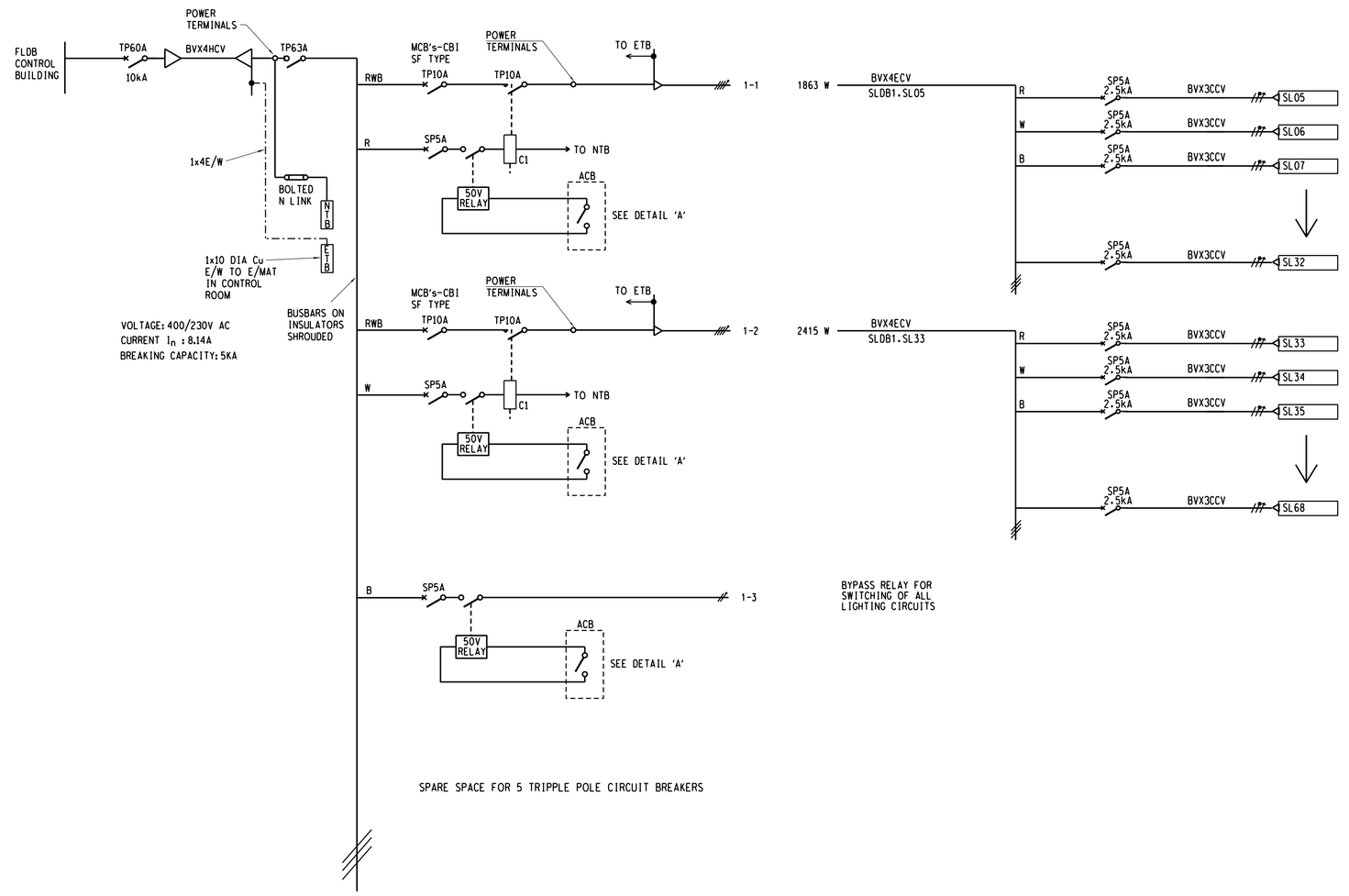

SECURITY LIGHTING DISTRIBUTION BOARD 2

400/230V AC MAIN BOARD	CABLE TYPE / CABLE No	LOCAL SWITCH	SECURITY LIGHTING DISTRIBUTION BOARD: PHASES	PROTECTION & CONTROL DEVICES	CABLE/CONDUCTOR & CONDUIT SIZE	CCT No	LOAD	CABLE TYPE / CABLE No	POLE TERMINATION BOARD	WIRING	LUMINAIRE LABEL

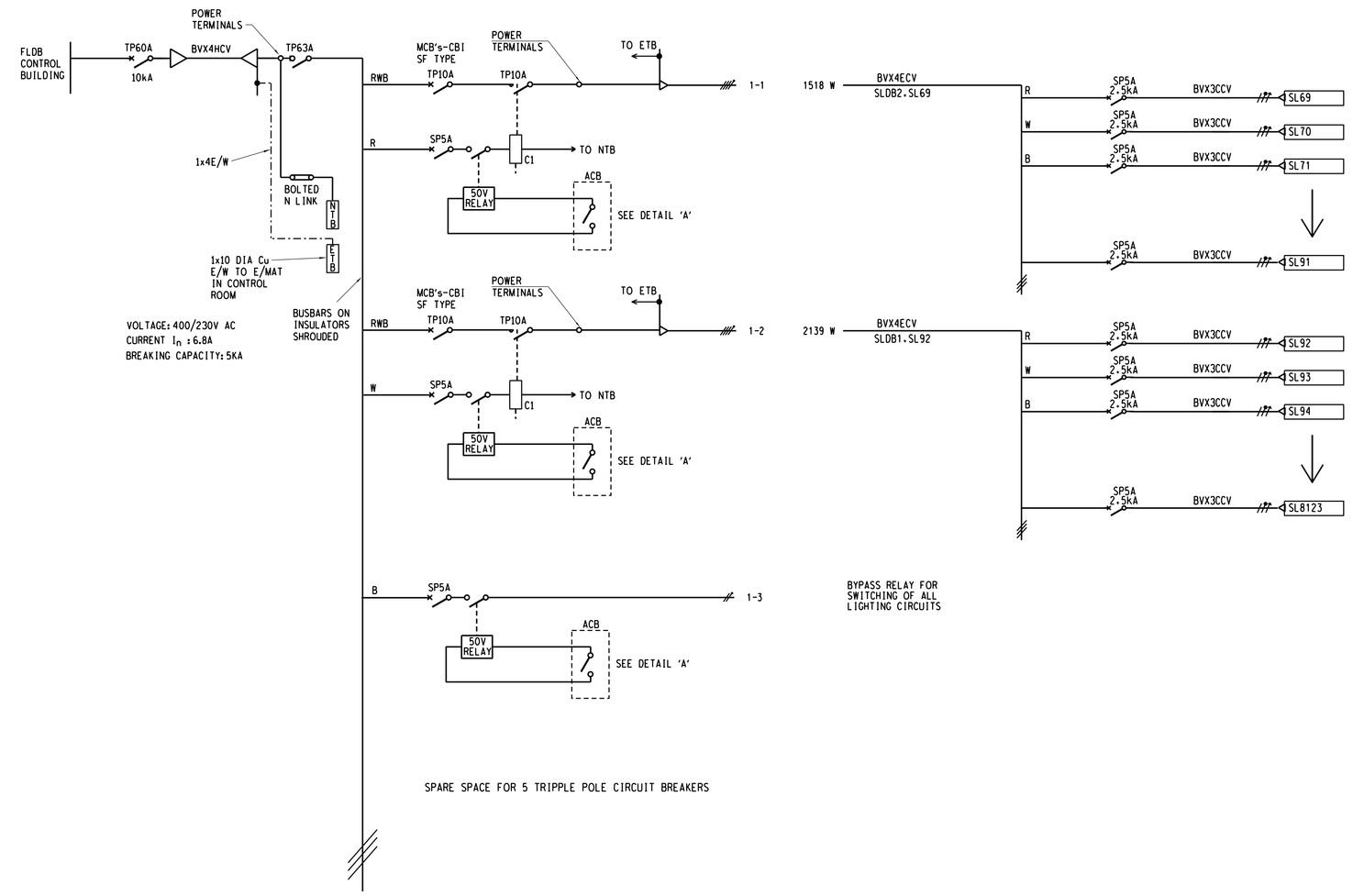

ELECTRICAL LEGEND:
(ADDITION TO DGN 0.00/3886)

- CIRCUIT BREAKER
- SWITCH-DISCONNECTOR
- CABLE GLAND WITH EARTH TAG
- EARTHSTUD
- TERMINALS

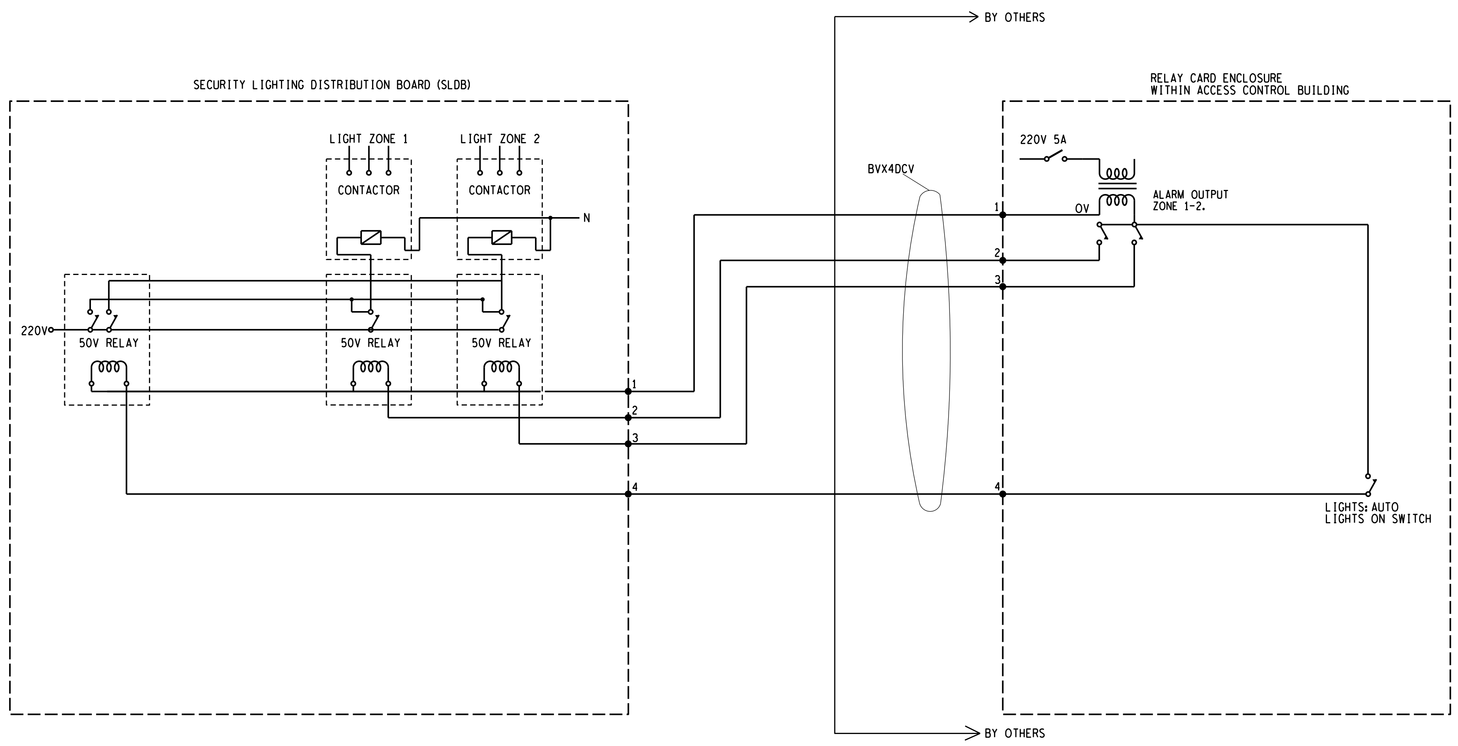

DETAIL 'A' FOR SLDB1 AND SLDB2

REV	REVISION DESCRIPTION	BY	CHKD	AUTH	DATE	REFERENCE DRAWINGS
0						

APPROVED BY
DATE
CHECKED BY
DATE
DRAWN BY
DATE
SCALE NS.SNOMB

Eskom
Eskom Holdings SOC Ltd
Reg No 2002/015527/30

SECURITY LIGHTING SLDB1 AND SLDB2
400/230V AC SCHEMATIC
AND CABLE BLOCK DIAGRAM

SHEET NUMBER	REVISION
2	0

SIZE GROOTTE A0L