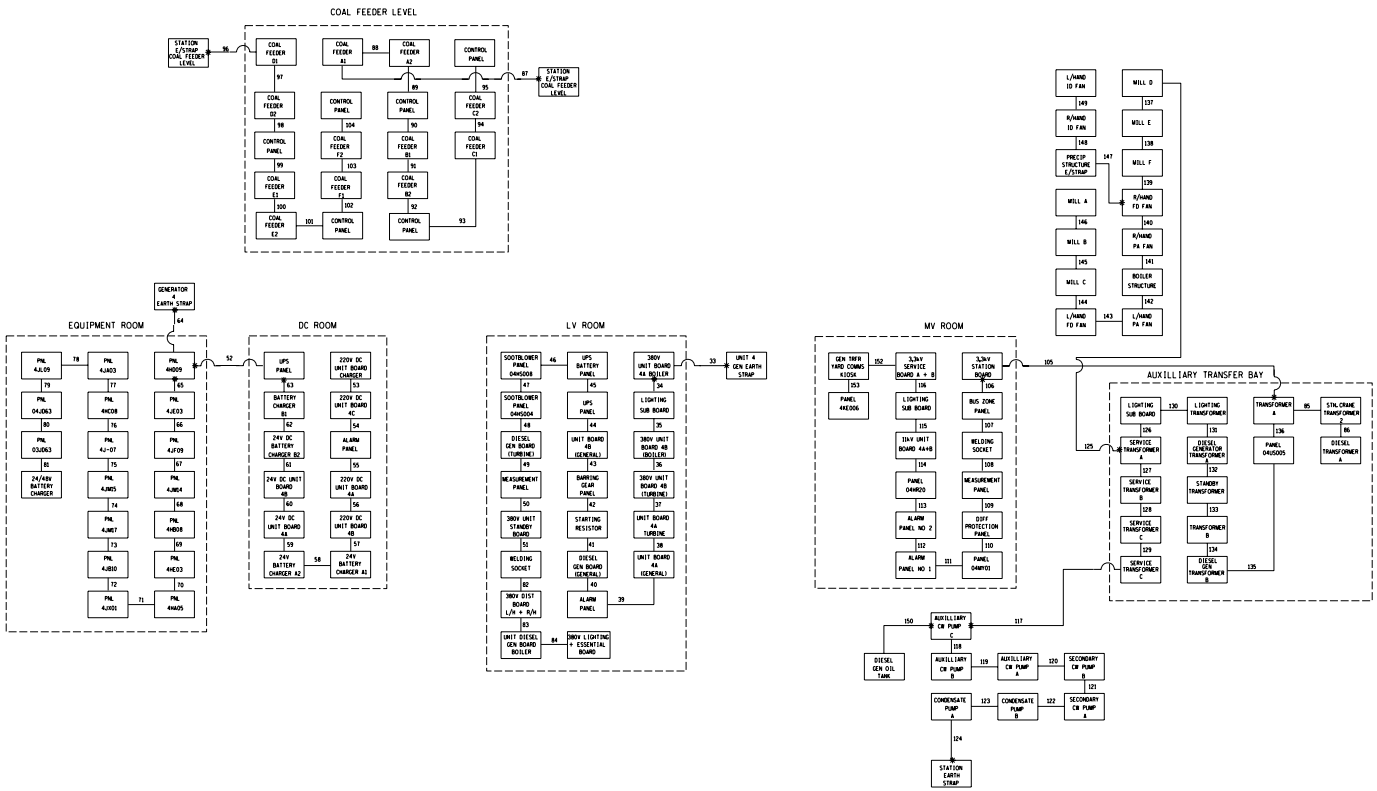

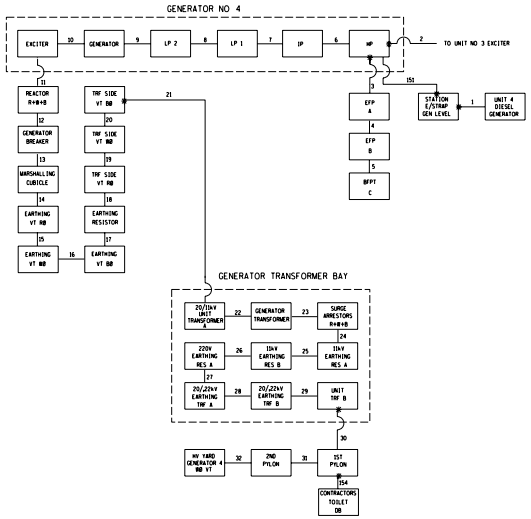

* LETHABO POWER STATION EARTH MAT CONTINUITY TEST REPORT IS AVAILABLE ON THE DOCUMENT CONTROL SYSTEM:- ENGINEERING→DESIGN_SPEC→EARTHING

DATE TESTED	TESTED BY	SIGNATURE	REMARKS
2003.10.30	D FOURIE		REPORT PS/R/03/11/02
2005.11.21	JG STEYN		REPORT TSK 78565
2008.12.01	EV WIELING		REPORT TSL 14978
2010.06.01	SC MABUSA		REPORT TSL 32317

CR 57716	2	14.12.2010	CR17TE- ADD CONTRACTORS TOILET DB TESTED IN JUNE 2010	HM	JS	LES		
CR 16176	1	04.01.2006	UPDATED - TESTED ON 21.11.2005	HM	ZJ	HJvS		
CR 15286	0	12.02.2002	FIRST ISSUE	HM	MH	HJvS		23.63/54110-54118
D.O.	REV	DATE	** REVISION **	REV BY	CHKD BY	AUTH BY	KKS APP	23.63 REFERENCE DRAWINGS

ORG REGISTR	17 10 2002	ORG96	INDEX REFERENCE :
DEF NO			APPROVED BY : HJ v STADEN 12.02.2002
KKS APP			AUTHORISED BY :
AUTH BY	12 02 2002	HJvS	ESKOM HOLDINGS LTD. REG. No. 2002/015527/06
CHKD BY	12 02 2002	MH	
DRAWN BY	12 02 2002	HM	
SCALE	N.T.S.		

LETHABO POWER STATION

EARTHING CONTINUITY DIAGRAM UNIT 4

Eskom

23.63/54916

REV 02

THIS DRAWING HAS BEEN CREATED ON A C.A.D. SYSTEM. ANY AMENDMENT MUST BE EFFECTED ON THE SAME SYSTEM.

SIZE GROOTTE A0L