Eskom	Standard	Technology

Title:	**TRMSCAAC 6: THE STANDARD FOR THE CONSTRUCTION OF OVERHEAD POWERLINES**	Unique Identifier:	**240-47172520**
		Alternative Reference Number:	**N/A**
		Area of Applicability:	**Engineering**
		Documentation Type:	**Standard**
		Revision:	**2**
		Total Pages:	**112**
		Next Review Date:	**July 2026**
		Disclosure Classification:	**Controlled Disclosure**

Compiled by	Approved by	Approved by
Dan Dukhan	**Sibonelo Nzama**	**Lebo Maphumulo**
Chief Civil Engineer, Lines Engineering Services	**Civil & Structural Manager, Lines Engineering Services**	**Corporate Specialist, Lines Engineering Services**
Date: 30/07/2021	Date: 30/07/2021	Date: 30/07/2021

Supported & Authorized by

Riaz Vajeth

Senior Manager, Lines Engineering Services

SCOT/SC Chairperson

Date: 30/07/2021

PCM Reference: **240-53458961**

SCOT Study Committee Number/Name: Overhead Lines Study Committee - Foundations and Civil Care Group

Content

Page

1. Introduction 1
2. Supporting Clauses 1
   - 2.1 Scope 1
     - 2.1.1 Purpose 1
     - 2.1.2 Applicability 1
   - 2.2 Normative/Informative References 1
     - 2.2.1 Normative 1
     - 2.2.2 Informative 3
   - 2.3 Definitions 3
     - 2.3.1 General 3
     - 2.3.2 Disclosure Classification 5
   - 2.4 Abbreviations 5
   - 2.5 Roles and responsibilities 5
   - 2.6 Process for monitoring 6
   - 2.7 Related/supporting documents 6
3. Line survey 6
   - 3.1 Plans and Profiles 6
   - 3.2 Setting-out of route 6
   - 3.3 Survey Beacons at bend points 6
   - 3.4 Survey by the Contractor 6
   - 3.5 Pegging by the Contractor 7
     - 3.5.1 Procedure 7
     - 3.5.2 Setting out of angle towers 7
     - 3.5.3 Correct placing of towers 7
4. Foundations 7
   - 4.1 Geotechnical Considerations 7
     - 4.1.1 Planning Geotechnical Investigation Works 8
     - 4.1.2 Levels of Geotechnical Investigation 8
     - 4.1.3 Standard Geotechnical Investigations 9
     - 4.1.4 Larger/Complex Geotechnical Investigations 11
     - 4.1.5 Geotechnical Investigations for Pressure Grout Injected Micropiles 15
     - 4.1.6 Geotechnical Investigation on Conventional Drilled Foundations 15
     - 4.1.7 Specialist Geotechnical Conditions 16
     - 4.1.8 Soil Nominations 16
     - 4.1.9 Soil Nomination Amendments 17
   - 4.2 Foundation Design 18
     - 4.2.1 Foundation Design Loads 18
     - 4.2.2 Soil and Rock Classifications 18
     - 4.2.3 Geotechnical Design Parameters 18
     - 4.2.4 Drilled Foundations: geotechnical design parameters 19
     - 4.2.5 Strength factors for foundation systems 20
   - 4.3 Foundation systems 21
     - 4.3.1 General 21
     - 4.3.2 Pad and Pier/Column Foundations for Self Supporting Towers 21

ESKOM COPYRIGHT PROTECTED

When downloaded from the WEB, this document is uncontrolled and the responsibility rests with the user to ensure it is in line with the authorized version on the WEB.

4.3.3 Pad and Plinth Foundations for Guyed Tower Centre Support 22
4.3.4 Drilled Foundations 22
4.4 Guy Anchor Systems....25
4.4.1 General 25
4.4.2 Anchor Blocks (Dead Man Anchor) 26
4.4.3 Single Inclines Drilled Pile Anchors 26
4.4.4 Foundations for concrete or steel poles....26
4.4.5 Special Foundation Designs 27
4.5 Concrete and Grouts 27
4.5.1 General 27
4.5.2 Cement Types....28
4.5.3 Aggregates....28
4.5.4 Workability....29
4.5.5 Reinforcing Steel....29
4.6 Construction 30
4.6.1 Excavation....30
4.6.2 Backfilling 31
4.7 Concrete Foundations 32
4.7.1 Supply of Materials 32
4.7.2 Prior to concrete mix acceptance and placement....32
4.7.3 Tolerances for concrete construction....32
4.7.4 Workmanship 33
4.7.5 Formwork 33
4.7.6 Concrete and Grout Mixing and Testing 34
4.7.7 Mixing of Concrete 35
4.7.8 Placement of Reinforcing Steel....35
4.7.9 Placement of Embedded Items....35
4.7.10 Placement of Concrete 36
4.7.11 Construction Joints 37
4.7.12 Concrete Surface Finish 38
4.7.13 Concrete Curing....38
4.7.14 Concrete Cracks Repair....38
4.7.15 Steelwork 38
4.8 Anchor Block (deadman), Pile and Rock Anchor Resting....39
4.8.1 Design Load (Ultimate Load) Anchor Test Requirements 39
4.8.2 Block Guy Anchor (Deadman) Design Load Testing Criteria 39
4.8.3 Pile Design Load Testing Criteria 40
4.8.4 Rock Anchor Design Load Testing Criteria....40
4.8.5 Pressure Grout Injected Anchors – Test Criteria 42
4.8.6 Proof Load Anchor/Pile Test Requirements 43
4.8.7 Pole Foundations 46
4.9 Access and Ground Erosion protection for overhead line construction 47

5. Towers 47
5.1 Tower Design 47
5.1.1 By the Employer....47
5.1.2 By the Contractor 47
5.2 Tower Manufacturing....47
5.2.1 Tower Code Numbers and Marking 47

ESKOM COPYRIGHT PROTECTED

When downloaded from the WEB, this document is uncontrolled and the responsibility rests with the user to ensure it is in line with the authorized version on the WEB.

5.2.2 Tower Steel Standard 48
5.2.3 General Tower Steel Fabrication 48
5.2.4 Steel Bending 49
5.2.5 Bolts, Nuts and Washers 50
5.2.6 Shackles and extension links 50
5.2.7 Anti-Climbing Devices 51
5.2.8 Fall Arrest Anchors 51
5.2.9 Anti-theft Measures and Marking 51
5.2.10 Galvanising 51
5.2.11 Welding 52
5.2.12 Tower Prototype Inspection 52
5.2.13 Testing and Inspection 52
5.3 Guy Ropes and Guy Attachments 52
5.3.1 Guy Ropes 52
5.3.2 Guy Attachments 52
5.3.3 Fall Protection Systems 53
5.4 Tower Erection 54
5.4.1 Tower Material Handling and Storage 54
5.4.2 Assembly and Erection of Towers 54
5.4.3 Erection of Guyed Towers 54
5.4.4 Tower Labels 56
5.5 Tower Dressing 56

6. Stringing 56
6.1 Material Supply 56
6.1.1 By the Employer 56
6.1.2 By the Contractor 56
6.2 Installation of Phase and Earth Conductors 57
6.2.1 Changes in Phase Configuration 57
6.2.2 Crossings, Notices and Permits 57
6.2.3 Handling and Stringing of Conductors 58
6.2.4 Joints 60
6.2.5 Preparation of Metal to Metal Contact Surfaces 61
6.2.6 Conductor Repairs 62
6.2.7 Regulating 62
6.2.8 Clamping of Conductors 64
6.2.9 Vibration Dampers for Single Conductors 64
6.2.10 Bundle Conductor Spacers and Spacer Dampers 64
6.2.11 Aerial Warning Spheres and Bird Flight Diverters 65
6.2.12 Jumpers 66
6.3 Stringing of OPGW 66

7. Insulators 66
7.1 Receiving 66
7.2 Storage 67
7.3 Loading and off-Loading 67
7.4 Transport to site 67
7.5 Visual Inspection of Insulators 67
7.6 Insulator Handling 68
7.7 Installation 68

ESKOM COPYRIGHT PROTECTED

When downloaded from the WEB, this document is uncontrolled and the responsibility rests with the user to ensure it is in line with the authorized version on the WEB.

7.8 Post Installation 69
7.9 Marking, Labelling and Packaging 69
7.10 Spares 69
8. Line Impedence Measurement 69
9. As-Built Documentation 69
10. Corrosion Protection 69
10.1 Hot Dip Galvansing 69
10.1.1 Tower Steel Members 70
10.1.2 Bolts, Nuts and Washers 71
10.2 Organic Coating System 71
11. Photographic and Video Records 72
12. Authorization 72
13. Revisions 72
14. Development team 72
15. Acknowledgements 73
Annex A – Tolerances 74
1. Steel tolerances 74
2. Bolt tolerances 75
Annex B – Details of fall Arrest Anchor 77
Annex C – Electrical Safety Earthing during Construction 78
1. Close Proximity to Live Conductors or Apparatus (Ref Table C.1) 78
2. Stringing and Regulating 79
3. Handling of Conductive Tools 84
4. Crossings 84
Annex D – Foundation Nominations 85
Annex E – As Built Documentation Format 91
Annex F – Access and Ground Erosion Protection for Overhead Line Construction 95
1. Scope and Purpose 95
2. Normative references 95
3. Compliance statement 95
4. Access planning 95
4.1 Parties and inputs to access planning 95
4.1.1 Basic Access Philosophy 96
5. Access roads 96
5.1 Positioning and construction of water diversion beams 96
5.2 Constructon of new roads in sloping terrain 97
5.3 Drainage on roads in sloping terrain 98
5.3.1 Stabilised Outlet Berms 98
5.3.2 Gabion Outlet Drains 99
5.4 Armorflex strip roads 99
5.5 Concrete strip roads 100

ESKOM COPYRIGHT PROTECTED

When downloaded from the WEB, this document is uncontrolled and the responsibility rests with the user to ensure it is in line with the authorized version on the WEB.

5.6 Closure of roads for erosion control 100

6. Water crossings 101
6.1 Water courses and small river crossings 101
6.2 Temporary dry bed/marsh crossings 102
6.3 Drift water course crossings 102
6.4 Low level bridge or culvert crossings (pipes with concrete slabs) 103

7. Tower sites in sloping terrain 104
7.1 Alignment of access to tower sites 104
7.2 Access for cranes 106

8. Rehabilitation of tower sites and access roads 107
8.1 Arid environments or sparse vegetation 108
8.2 Sloping terrain 108
8.3 Proximity to flowing or still water 108

9. Post construction inspections 108

10. Erosion prevention structures 108
10.1 Heavy systems 108
10.2 Gabion mattress walls 109
10.3 Light systems 109

11. References 110

Annex G – Corrosion coating classifications for hot drop galvanising 111

Annex H – Guy foundation Link Plates 112

Figures

Figure 1: Diagram depicting transverse and longitudinal face of powerline 5

Figure 2: Test pit positions as related to tower type 10

Figure 3: Example of Alkali Silica Reaction (ASR) being considered in concrete design 27

Figure 4: Proof Load Percentage versus Displacement 46

Figure 5: Checking correct tension in guy wire 55

Figure 6: Installation of bird flight diverters 65

Figure 7: Installation of Aerial Warning Spheres 66

Figure A.1: Tolerance requirement on holes (a) 75

Figure A.2: Tolerance requirement on holes (b) 75

Figure B.1: Fall Arrest Anchor Details 77

Figure B.2. Fall Arrest Anchor Details 77

Figure C.1: Example of insulated earth sticks 80

Figure C.2: Electrostatic Coupling Mechanism 81

Figure C.3: Electromagnetic Coupling Mechanism 82

Figure C.4: Conversion of Standard Running Blocks 84

Figure D.1: MCCSSO: Soils Identification 85

Figure D.2: Contractors Soil Profile Sheet 86

Figure D.3: Contractors Soil Nomination List 87

ESKOM COPYRIGHT PROTECTED

When downloaded from the WEB, this document is uncontrolled and the responsibility rests with the user to ensure it is in line with the authorized version on the WEB.

Figure D.4. Quality & Inspecion Plan – Grout Injected Anchor Construction 88

Figure D.5. Guideline for Notification of Engineering Change....88

Figure F.1: Alignment of water diversion beams 97

Figure F.2: Typical cross-section of access road requiring cut and fill....98

Figure F.3: Stone pitched outlet berm 98

Figure F.4: Gabion Outlet Drain 99

Figure F.5: “Armorflex” type interlocking system for steep access of up to 1:16 99

Figure F.6: Concrete strip road for steep access of up to 1:16 100

Figure F.7: Road Closure in steep terrain 101

Figure F.8: Correct and Incorrect methods of cutting stream crossings 102

Figure F.9: Increasing load bearing capacity using a cellular confinement system (Sources: Elmich.com and Geoproducts.org....102

Figure F.10: Water course crossing with Gabion mattresses or rock/gravel filling on Geotextile Filter Material....103

Figure F.11: River/Water course crossing with pipes, rock/gravel mortar filling and concrete slab....104

Figure F.12: Typical access of self-supporting lattice tower....105

Figure F.13: Typical access to guyed tower 105

Figure F.14: Typical Access to Self-Supporting pole 106

Figure F.15: Typical 80 ton crane plan dimensions....107

Figure F.16: Schematic sketch for layout of gabion wall 109

Figure F.17: Silt Screen used for rehabilitation of eroded areas 110

Figure H.1: Guy Foundation Link Plates - Fillet Hole and U-Bolt 112

Figure H.2: Guy Foundation Link Plates - Straight Hole and U-Bolt 112

Tables

Table 1: Planning Soil Investigations on Stable Soil Profiles above the Water (Byrne, et. al., 2008)....13

Table 2: Planning Soil Investigations in Saturated, Variable Soils (Coastal Areas/Adjacent to Water Courses) (Byrne, et. al., 2008) 14

Table 3: Soil Nominations: Type change by single soil/rock type 17

Table 4: Soil Nomination: Type change by more than on soil or rock type 17

Table 5: Geotechnical design parameters for rock....18

Table 6: Geotechnical design parameters for soil types ‘1’ and ‘2’ 19

Table 7: Geotechnical design parameters for soil types ‘3’ and ‘4’ 19

Table 8: Strength factors for foundation systems * 20

Table 9: Percentage Limits for Acid Soluble Cholride as NaCl 29

Table 10: Foundation Test Criteria 41

Table 11: Pressure Grout Injected Anchors Test Criteria: Soil Types 1 - 3 43

Table 12: Pressure Grout Injected Anchors Test Criteria: Soft/Hard Rock 43

Table 13: Proof Loads 45

ESKOM COPYRIGHT PROTECTED

When downloaded from the WEB, this document is uncontrolled and the responsibility rests with the user to ensure it is in line with the authorized version on the WEB.

Table A.1: Summary of main tolerances for the manufacturing of angles and plates generally used in tower fabrication 74

Table A.2: Details of Bolt and Nut Tolerances 76

Table C.1: Minimum Safe Working Clearances....78

Table E.1: Outline of General As-Built Data....91

Table E.2: Project As-Built Requirements 92

Table G.1: Minimum coating thickness and mass specified in the design of the steel members too be 111

Table G.2: Minimum coating thickness and mass specified for fasteners to be achieved 111

ESKOM COPYRIGHT PROTECTED

When downloaded from the WEB, this document is uncontrolled and the responsibility rests with the user to ensure it is in line with the authorized version on the WEB.

1. Introduction

This standard details the requirements for the fabrication, testing, supply, delivery and erection of power line towers and foundations, together with the stringing of all conductors and associated line hardware, insulators and fittings. This standard is applicable to Transmission Power Lines only. Design aspects are included for towers and foundations. Certain SHEQ aspects are also covered in this document.

2. Supporting Clauses

2.1 Scope

2.1.1 Purpose

TRMSCAAC 6 supersedes all other versions of TRMSCAAC document.

2.1.2 Applicability

This standard pertains to all overhead transmission powerlines in Eskom Holdings SOC Ltd.

This version contains improvements and additions from the previous version and must be studied carefully.

2.2 Normative/Informative References

The following documents are read in conjunction with this standard.

The Contractor makes use of the latest applicable revision of the documentations mentioned below.

2.2.1 Normative

[1] OSH Act & Regulations: Act 85 of 1993 and regulations

[2] Fencing Act: Fencing Act No. 31 of 1963 as amended

[3] SAISC: South African Steel Construction Handbook

[4] NEMA Government Gazette: National Environmental Management Act No. 107 of 1998; Part 5A "Generic EMPr for Overhead Power Line Construction" Pg 19; "Strategic Environmental Assessment for Electricity Grid Infrastructure in South Africa."

[5] ECCS: Recommendations for agles in lattice transmission towers, No.39

[6] SANS 282: Bending dimensions and scheduling of steel reinforcement for concrete

[7] SANS: 1089:1991: Round Wire Concentric Lay Overhead Electrical Standard Conductors

[8] SANS 50197-1:2013: Portland Cement (ordinary, rapid hardening and sulphate-resisting)

[9] SANS 60815-1:2009: Selection and dimensioning of high voltage insulators intended for use in polluted conditions

[10] SANS 50197-1:2013: Portland blast furnace cement

[11] SANS 675:2009: Zinc-coated fencing wire

[12] SANS 121:2011/ (ISO 1461:2009): Hot dip galvanised coatings on fabricated iron and steel articles-specifications and test methods

[13] SANS 10684:2011/ (ISO 10684:2004): Fasteners: Hot dip galvanized coatings

[14] SANS 14713-3:2011: Zinc coatings: Guidelines and recommendations for the protection against corrosion of iron and steel in structures

[15] SANS 50197-1:2013: Portland cement 15 (ordinary and rapid hardening)

[16] SANS 920:1985: Steel bars for concrete reinforcement

ESKOM COPYRIGHT PROTECTED

When downloaded from the WEB, this document is uncontrolled and the responsibility rests with the user to ensure it is in line with the authorized version on the WEB.

[17] SANS 1083:2018: Aggregates from natural sources

[18] SANS 55167-1:2011: Portland cement extenders, Part 1: Ground granulated blast furnace slag

[19] SANS 50450-1:2014: Portland cement extenders, Part 2: Fly ash

[20] SANS 53263-1:2011: Portland cement extenders, Part 3: Condensed silica fume

[21] SANS 50197-1:2013: Portland fly ash cement

[22] SANS 2001-CC1:2012: Construction works Part CC1: Concrete works (structural)

[23] SANS 2001-CC2:2012: Construction works Part CC2: Concrete works (minor works)

[24] SANS 10100-1:1992: The structural use of concrete. Part 1: Design

[25] SANS 10100-2:1992: The structural use of concrete, Part 2: Materials and execution of work.

[26] SANS 10144:1978: Detailing of steel reinforcement for concrete

[27] SANS 10162-1:1993: The structural use of steel, Part 1: Limit-state design of hot-rolled steelwork.

[28] SANS 10162-2:1993: The structural use of steel, Part 2: Limit-states design of cold-formed steelwork

[29] SANS 10162-3:1993: The structural use of steel, Part 3: Allowable stress design steelwork

[30] SANS 10280-1:2013: Overhead power lines for conditions prevailing in South Africa

[31] SANS 3001-CO1-1: Concrete Tests: Mixing fresh concrete in the laboratory

[32] SANS 3001-CO1-2: Concrete Tests: sampling of freshly mixed concrete Concrete Tests: Consistency of freshly mixed concrete- Slump test

[33] SANS 3001-CO1-3: Civil Engineering Test Methods: Consistency of freshly mixed concrete – Slump test

[34] SANS 3001-CO2-3: Compressive strength of hardened concrete (including making and curing of the test cubes)

[35] SANS 61089 IEC: Round wire concentric lay overhead electrical stranded conductors

[36] Agriculture Bulletin 399: Department of Agriculture Bulletin No. 399 ISBN0621082589, A primer on soil conservation

[37] SANS 50025 parts 1 to 6: Hot rolled products of structural steels

[38] SANS 1200 A to F Series/ SANS 2001-CC1:2012: Civil Engineering Construction Aspects

[39] SANS 51008:2006: Water for Concrete

[40] SAICE CoP: South African Institution of Civil Engineering - Geotechnical Division: “Site Investigation Code of Practice, 1st Edition” (2010)

[41] SANS 1200 DK: Standardized specification for civil engineering construction Section DK: Gabions and pitching

[42] SANS 1580: Hexagonal steel wire mesh gabions and revet mattresses

[43] SANS 1556-1: ISO metric screw threads Part 1: Principles and basic data for general purpose screw threads

[44] SANS 2001-CS1: Construction works Part CS1: Structural steelwork

[45] SANS 5863: Concrete tests - Compressive strength of hardened concrete

[46] SANS 54199: Execution of special geotechnical works - Micropiles

[47] 32-9: Definition of Eskom documents

[48] 32-644: Eskom documentation management standard

ESKOM COPYRIGHT PROTECTED

When downloaded from the WEB, this document is uncontrolled and the responsibility rests with the user to ensure it is in line with the authorized version on the WEB.

[49] 240-93821974 - Review and Publication of SCOT Documents Related to Transmission and Distribution Businesses

[50] 474-285: Specification for anti-theft measures

[51] 240-143268945: Line Impedance measurements

[52] 240-70172585 Vegetation Management and Maintenance within Eskom Land, Servitudes and Rights of Way

[53] 240-120804300: Standard For The Labelling Of Electrical Equipment Within Eskom Wires Networks

[54] 240-75660336: Substation And Network Equipment Label Specification

[55] 240-130615862: Earthing Of Transmission Line Towers

[56] NRS 061-2:2004: Specification for overhead ground wire with optical fibre. Part 2: Installation guidelines

[57] NWS 1074: Guy strand grips for transmission lines

[58] NWP 3402: Power lines in the vicinity of aerodromes and hazards to aircraft.

[59] 32-727: Safety, Health, Environment, and Quality (SHEQ) Policy

[60] 240-57127951: Standard for the Execution of Site Investigations

[61] 240-72252925: As-Built document template

[62] 240-67561924 – Design, manufacturing and installation of transmission line labels

[63] ASCE Manual 10: Guide for design of steel transmission towers

[64] IEC 60826:2003: Design criteria for overhead transmission lines

[65] DIN EN ISO 898-1: Mechanical properties of fasteners made of carbon steel and alloy steel. Part 1: Bolts, screws and studs

[66] DIN 7990: Mechanical properties of fasteners made of carbon steel and alloy steel. Part 1: Bolts, screws and studs

[67] ISO 12944: 2017 parts 1 to 7: Paints and varnishes: Corrosion protection of steel structures by protective paint systems

2.2.2 Informative

[68] Jennings, J.E, Brink, A.B.A, & Williams, A.A.B: “Revised Guide to Soil Profiling for Civil Engineering purposes in Southern Africa” Trans. S.A.I.C.E, Vol. 15, No. 1 (1973)

[69] Franki: “Guide to Practical Geotechnical Engineering in Southern Africa, 4th Edition” (2008)

2.3 Definitions

2.3.1 General

Definition	Description
Batch	A specified quantity of samples, components or members
Contractor	The party appointed by the Employer to “Provide the Works”.
Design Engineer/ Designer	The person responsible in terms of the “Occupational Health and Safety Act and Regulations” for the Employer from time to time to act in the capacity and notified, by name and in writing by the Employer to the Contractor, as required. He/She shall be registered with ECSA as a professional Engineer/Technologist. All communication to the design engineer shall be done via the Project Manager.

ESKOM COPYRIGHT PROTECTED

When downloaded from the WEB, this document is uncontrolled and the responsibility rests with the user to ensure it is in line with the authorized version on the WEB.

Definition	Description
Employer	The party for whom the works are to be executed and in this standard means Eskom (Transmission, Distribution, Technology, Power Delivery Projects) and where applicable, includes Eskom's appointed successor in title but not, except with the written content of the Contractor, any assignee of Eskom.
Eskom Site Representative	The person appointed by the Employer from time to time to act in the capacity and notified, by name and in writing by the Employer to the Contractor, as required in "The NEC Engineering and Construction Contract", FIDIC or any applicable contract.
Fall Arrest Anchor	A step bolt of size M16/M20 which is threaded on the one end for attachment to the tower and fitted with a bent plate with a hole for attachment of a safety harness hook.
Lands	Refers to cultivated land or land set aside for exclusive use.
Line Specification	A document that specify the requirements for the relevant line, turn-in or by-pass that needs to be constructed, refurbished or any other work that may be required to be executed as part of the project. Specific requirements outlined in the Line Specification shall take precedence over requirements specified in this document.
Longitudinal Face	See Figure 1 (as per SANS 10280-1 definition NRS041)
Project Manager	Appointed by the Employer under Act 16.2 & Sect 4h (5) of CR as the client's Agent to act as his/her representative. The person responsible for co-ordinating all aspects of a project. All communication must be channelled via the Project Manager.
Running Block	A set of free running pulleys or wheels spaced next to another typically in a supporting frame which can be attached to a tower in order to temporarily support the conductors during stringing and regulating operations. This can also be referred to as a dolly, sheave, stringing block, stringing sheave or stringing traveller that is appropriately earthed.
Tower Dressing	This is the activity during line construction which after tower erection all line hardware, insulators, running blocks etc. are connected to the tower in preparation for stringing.
Transverse Face	See Figure 1 (as per SANS 10280-1 definition NRS041)

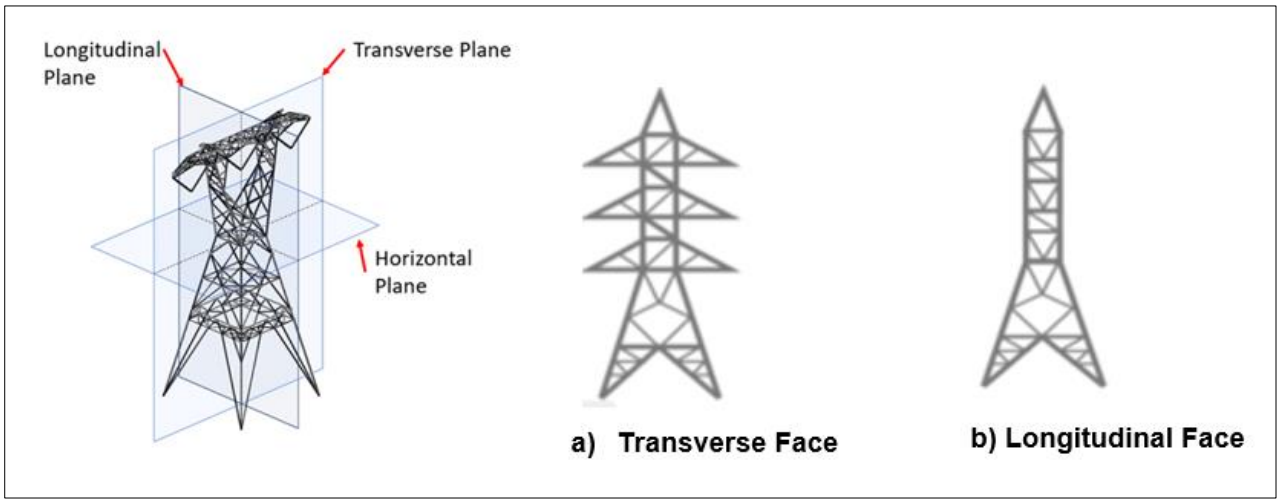

ESKOM COPYRIGHT PROTECTED

When downloaded from the WEB, this document is uncontrolled and the responsibility rests with the user to ensure it is in line with the authorized version on the WEB.

Figure 1: Diagram depicting transverse and longitudinal face of powerline

2.3.2 Disclosure Classification

Controlled disclosure: controlled disclosure to external parties (either enforced by law, or discretionary).

2.4 Abbreviations

Abbreviation	Description
ACSR	Aluminium Conductor Steel Reinforced
ASR	Alkali Silica Reactions
BoQ	Bill of Quantities
CPT(u)	Cone Penetration Test
DCP	Dynamic Cone Penetrometer
DPSH	Dynamic Probe Super Heavy
EASBP	Estimated Allowable Safe Bearing Pressure
ECSA	Engineering Council of South Africa
FIDIC	Fédération Internationale Des Ingénieurs-Conseils (International Federation of Consulting Engineers)
HDGASA	Hot Dip Galvanising Association
HPDE	High Density Poly Ethylene
IEC	International Electrotechnical Commission
ISO	International Organisation for Standardisation
LES	Lines Engineering Services
MCCSSO	Moisture Condition, Colour, Consistency, Structure, Soil Texture and Origin
NEC	New Engineering Contract
OPGW	Optical Ground Wire
OSH	Occupational Health and Safety
PPE	Personal Protective Equipment
SACNASP	South African Council for Natural Scientific Professions
SAICE	South African Institute for Civil Engineers
SANAS	South African National Accreditation System
SANS	South African National Standards
SHEQ	Safety, Health, Environment and Quality
SPT	Standard Penetration Test
TLB	Tractor Loader Backhoe
URS	User Requirement Specification

2.5 Roles and responsibilities

Not applicable.

ESKOM COPYRIGHT PROTECTED

When downloaded from the WEB, this document is uncontrolled and the responsibility rests with the user to ensure it is in line with the authorized version on the WEB.

2.6 Process for monitoring

Not applicable.

2.7 Related/supporting documents

Not applicable.

3. Line survey

3.1 Plans and Profiles

The route of the line will be surveyed by the **Employer**, who will provide all necessary route plans and templated profile drawings, on which, tower types and the position thereof will be indicated.

Position of aircraft warning spheres, bird guards, bird flights diverters and other site-specific environmental considerations will be indicated on the construction profiles.

3.2 Setting-out of route

The line route will be set-out by the **Employer** prior to the commencement of construction. Bend positions are to be demarcated with iron pegs, set in concrete and clearly labelled as per approved profile. The diameter of the iron pegs must not be less than 16 mm with 20 mm diameter preferred in rural areas. To ensure visibility of bend positions a cairn of stones must be placed around the peg and white washed. The route must further be demarcated by online reference stakes at least 1.2m high and at approximately 2 km intervals and should in most cases be inter-visible.

3.3 Survey Beacons at bend points

At bend positions, the original iron pegs indicating the centre line of the transmission line route are on no account to be disturbed or removed, as these are required for servitude registration purposes. During foundation installation, the **Contractor** is to cast the bend pegs in position with concrete.

3.4 Survey by the Contractor

a) The pegging of tower positions, and where necessary, the establishing of self-supporting tower leg extensions and guy anchor positions for guy towers, shall be carried out by registered surveyors.

b) The **Contractor**, on completion of each 20 km or suitable section of the line, is to supply records of all distances measured for each individual tower position. These should agree with the profiles, and any discrepancy reported immediately to the **Design Engineer** via the **Project Manager**.

c) It is the **Contractor's** responsibility to inform the **Eskom Site Representative** immediately, should

   1) there be any discrepancy between the topography shown on the profiles and the actual ground;

   2) errors be found, for example where a tower position is physically in “lands” and the profile states "no-tower zones";

   3) Any new or existing features or other services either above or below the ground be found and which are not reflected on the line profiles. This includes land use, roads, telephone or power lines and pipelines/irrigation equipment which may adversely affect tower positions and/or statutory clearance requirements.

   4) The **Contractor**, in his opinion, finds that the site chosen is not suitable for a tower position, or the tower type indicated on the profiles is not suitable for the tower position e.g. excessive side slope.

d) It is the **Contractor's** responsibility to ensure that the surveyor is familiar with the limitations and restrictions of the tower types and construction methods used.

ESKOM COPYRIGHT PROTECTED

When downloaded from the WEB, this document is uncontrolled and the responsibility rests with the user to ensure it is in line with the authorized version on the WEB.

3.5 Pegging by the Contractor

3.5.1 Procedure

a) The **Contractor** shall undertake the pegging of the transmission line tower positions along the intended line route. Pegging shall proceed far in advance of foundation nomination and construction.

b) Tower centre position is to be marked with a steel peg not more than 50 mm high. This peg is to be made clearly visible by a stake driven into the ground (1.2 m high) or by rocks, both painted white. The pegs are to carry a tag showing the tower number, tower type and height. The pegs are to be left in position until the tower is erected.

3.5.2 Setting out of angle towers

All angle towers shall be positioned in such a way that the centre phase conductor is on the centre line of the servitude. Off-setting of towers may be required to achieve this. The amount of off-set can be obtained from the relevant tower drawings and/or by calculation.

3.5.3 Correct placing of towers

It is the **Contractor's** responsibility to ensure that accepted survey methods are used, and that checks are done to ensure the correct placing of towers.

Note: As numerous numbers appear on the profile drawings, the **Contractor** is to ensure that the actual span distances add up to the length of the straight or section of line between two bends. Any distance which are shown from a line point to a tower are to be taken as unchecked.

4. Foundations

4.1 Geotechnical Considerations

This section has incorporated technical aspects from 240-57127951 and SAICE Code of Practice (2010).

Geotechnical parameters provide a critical understanding of the prevalent ground conditions in areas of construction. These geotechnical parameters inform the civil engineering design and bring attention to areas requiring more monitoring. The intention of the geotechnical investigation is to prevent rework on designs and to identify areas which may require additional ground improvement measures to ensure constructability. Investigation timelines will be proportionate to the amount of geotechnical investigation works needed therefore the engineering geologist/geotechnical engineer, and/or suitably qualified practitioner, will assist in determining the adequate timeframe allocated for the works.

This section outlines geotechnical investigation works for standard investigations and outlines at a high level those which are larger/complex in nature. For smaller geotechnical investigations, the **Contractor** will follow applicable TRMSCAAC clauses; for Larger/complex geotechnical investigations the **Contractor** will be provided with a Scope of Works from the **Employer**. The geotechnical considerations contained herein are not prescriptive but are intended as a **guideline** to ensure the reader understands the approach and execution of geotechnical investigations in general, and the necessary inputs required.

The **Contractor** is responsible for the geotechnical investigation. The **Contractor** must ensure that geotechnical investigations are conducted by a professionally registered engineering geologist/geotechnical engineer; and/or suitably qualified practitioner (where applicable). Fieldworks are conducted in the presence of an **Employer Site Representative** (where applicable). The **Contractor** must ensure that the geotechnical parameters acquired through the geotechnical investigation works are a true reflection of the ground conditions and remains liable and accountable for the investigation findings.

ESKOM COPYRIGHT PROTECTED

When downloaded from the WEB, this document is uncontrolled and the responsibility rests with the user to ensure it is in line with the authorized version on the WEB.

4.1.1 Planning Geotechnical Investigation Works

Geotechnical Investigations include all field and laboratory testing required to provide inputs into the civil engineering designs and constructability considerations. Geotechnical Investigations will also identify the area and extent of problem soils and areas requiring specialist geotechnical considerations e.g. dolomitic land, undermining and wetlands.

When planning a geotechnical investigation, minimum requirements must be incorporated to ensure that the investigation is planned and executed correctly to meet the project intention. These requirements are:

Employer Objective – this will advise on the basis of the investigation (i.e. the intended project output). The Employer objectives are often captured in the Employer governance document for project initiation (i.e. URS/ROC/Technical Specification/Works Information).

Site/s Accessibility - the **Employer's Project Management** team will advise on and acquire the necessary permissions needed to access the investigation sites (unless otherwise agreed upon).

Health, Safety and Environment (HSE) - all geotechnical investigation works must comply with government legislation for health and safety of personnel (i.e. OSH Act (Act 85 of 1993) or most recent). Site specific safety considerations must be made available by the Employer, this includes safety inductions. Safety files must be submitted prior to works conducted and are often conducted with the guidance of an Employer SHEQ practitioner. Necessary Personal Protective Equipment (PPE) is specified within the OSH act unless adapted to prevalent site conditions. In instances where the site has specific PPE requirements or specialist safety conditions, these are outlined to the **Contractor/**persons conducting geotechnical works.

Existing Site Information – **The Employer** provides all existing; previously acquired; information on the area/s as well as presence of existing services in the area/s (where applicable). If no information is available, the potential presence of existing services is assessed based on the infrastructural density of the area and adjacent features. Existing services include telecommunication lines, water lines, sewage lines, gas/fuel lines etc.

Environmental Factors – The **Employers Project Manager** provides regional information such as proximity to wetlands and/or any other environmentally sensitive areas which may traverse the test area. The geotechnical investigation must conform to environmental legislature and applicable regulations. Necessary permits/licenses will need to be acquired by the **Employer,** unless otherwise discussed. For larger projects, engagement with relevant authorities may require geotechnical inputs, this must be discussed prior to the geotechnical investigations scope outline. The **Contractor** is required to make observations on the surrounding areas that may be of impact to the project (i.e. adjacent features).

4.1.2 Levels of Geotechnical Investigation

Owing to the intention of the geotechnical investigation and the level of detail required, a geotechnical investigation may be introduced at various project stages.

The **Employers** engineering geologist/geotechnical engineer; and/or suitably qualified practitioner; will identifying at which stage/s your project should introduce geotechnical investigation works, and to ensure that the investigation works are aimed at sourcing the correct inputs.

Pre-Feasibility Investigation – The pre-feasibility investigation is conducted during the initial establishment stages of the project and comprises of non-intrusive methods to gain information of the geology of the intended site/servitude. This investigation comprises of observations noted during site walkover and a desk study of available information. For the feasibility investigation works to occur, potential site/s can be flagged for the project and walkover access should be available (where applicable).

Feasibility Investigations – Also referred to as a preliminary investigation. The feasibility investigation is typically conducted during the initial stages of the project. This investigation will assist in determining general ground conditions, identifying the presence (not extent) of "problematic" geological conditions and potential constructability considerations within the intended servitude. This investigation comprises of a desk study of available information and limited intrusive investigations. For the feasibility investigation works to occur, site/s must be selected, and it must be possible for preliminary accesses to be arranged.

ESKOM COPYRIGHT PROTECTED

When downloaded from the WEB, this document is uncontrolled and the responsibility rests with the user to ensure it is in line with the authorized version on the WEB.

Detailed Investigations – the detailed geotechnical investigation is aimed at providing the detailed geotechnical inputs required for the civil engineering design, constructability analysis and risk management forecasts (where applicable). This investigation comprises of detailed intrusive ground investigations and laboratory testing. For the detailed investigation to occur, the site has been selected and indication can be given for servitude widths, preliminary loads, tower positions, environmental considerations (wetlands, heritage sites etc), spatial considerations (proximity to homesteads or important existing infrastructural features including municipal features) and accesses can be arranged.

Verification Investigations – the verification investigations are conducted during construction to ensure that the anticipated geotechnical criteria have been achieved. The scope of this investigation is limited to only those geological conditions requiring verification. The verification investigation may be conducted or scope increased, if older or previously acquired geotechnical information is deemed unreliable/unusable or the prevalent conditions have changed.

Monitoring Investigations – the monitoring investigations are conducted to monitor geotechnical conditions post construction (where necessary). Monitoring investigations are conducted to ascertain e.g. correctness of fill compaction and ground water level monitoring (particular interest for dolomitic areas).

Remedial Investigations – the remedial investigation can be used to identify failure causes or ascertain post failure geological conditions to prescribe appropriate remediation methods for footings.

*NB. For Standard Geotechnical Investigations, the detailed or verification investigations level is applied. For Larger/Complex Geotechnical Investigations, **the Employer** will specify the level of geotechnical investigation being conducted.*

4.1.3 Standard Geotechnical Investigations

This section outlines the geotechnical investigation methodology to be followed by the **Contractor** for standard geotechnical investigations. The **Contractor** will apply this section of TRMSCAAC 6 unless otherwise instructed by the **Employer.**

For Standard Geotechnical Investigations, all works must be conducted in accordance with the applicable national and regional standards, as well as legislative acts for the area and the Occupational Health & Safety Act.

4.1.3.1 Standard Geotechnical Investigation Methodology

Test Pits – are excavated by TLB or Excavator depending on the ground conditions and depth requirements of the investigation (if specified). Test pits are excavated in-situ (Ref Figure 2).The aim of the test pits is to provide information for soil layers (stratigraphy), seepage/groundwater presence, identification of geological features, indication of slope stability and allow for sample acquisition (where required) for laboratory testing. Test pits are logged according to accepted standards and guidelines.

a) Test pits are profiled by an engineering geologist/geotechnical engineer; and/or suitably qualified practitioner; that is registered with the South African Council for Natural Scientific Professions (SACNASP) or Engineering Council of South Africa (ECSA).

b) Test pits are profiled vertically and each soil layer is described in terms of Moisture Condition, Colour, Consistency, Structure, Soil Texture and Origin (MCCSSO). (Ref: Annex D).

c) Soil profiling should be conducted before the soils have dried out (i.e. profiled shortly after test pit is opened). This is on condition that it is safe to enter the test pits. If there have been delays before soil profiling can occur, then the profiler must attempt to get to the fresh soil behind the exposed face, this may be done by scraping at soil locally using a geological pick.

d) Where required, soil/rock samples are taken upon the discretion of the professionally registered engineering geologist/geotechnical engineer; and/or suitably qualified practitioner.

e) Should samples be required, a written request is submitted to the **Employer** for acceptance before commencement of testing.

f) Sample acquisition, storage, transportation and testing are done in accordance with applicable guidelines and standards.

ESKOM COPYRIGHT PROTECTED

When downloaded from the WEB, this document is uncontrolled and the responsibility rests with the user to ensure it is in line with the authorized version on the WEB.

g) If seepage is encountered, then the seepage is noted and where possible the rate of water flow is determined.

h) Test pit images must be taken in clear lighting with soil layers visible. A tape measure must be placed within the test pit which shows the soil layer depth correlation between the image and soil profile. A whiteboard (preferred) or sheet of paper showing the test pit name must also be visible in the image.

i) Test pit depths are taken down to a depth equal to the lesser of the depth of the foundation system to be constructed or 3m

j) Test pits are positioned outside the zone of influence of the foundation

k) Test pit coordinates are noted within the test pit logging sheet. The test pit position in respect to the tower leg and tower number is also noted.

l) Figure 2 (below) depicts the mandatory minimum number of test pits required per tower type.

m) A minimum of two test pits are required for self-supporting tower structures, both on the center line and in the midst of any two foundation legs (i.e. leg A –B and leg D-C or leg B-C and leg A-D). An example is depicted in figure 2 below, Tp1 and Tp2.

n) A minimum of three test pits are required for guyed V tower structures, two on the center line and next to any two foundation legs (i.e. leg A –B and leg D-C or leg B-C and leg A-D) and one at an approximate distance of 2metres from the center foundation, leg E on the other center line. An example is depicted in figure 2 below (i.e.Tp1, Tp2 and 2m away from leg E, Tp3).

o) A minimum of three test pits are required for cross rope tower structures, all three on the center line in a row. Two next to foundation leg A–B and leg D-C and one at dead center of the two mast foundations (leg E and F). An example is depicted in figure 2 below (Tp1, Tp2 and at dead center of the mast foundations, Tp3).

1) Observations are also made external to the test pit itself. Features such as land relief, proximity to water bodies, natural and man-made landforms, weather on day of test pit profiling and notable environmental impacts provide key information to soil behaviour with time.

p) Test pits are backfilled in such a manner so as to minimize differential settlements.

q) Test pits are not left open. If tests need to occur and test pits must be left open then test pits must be barricaded accordingly.

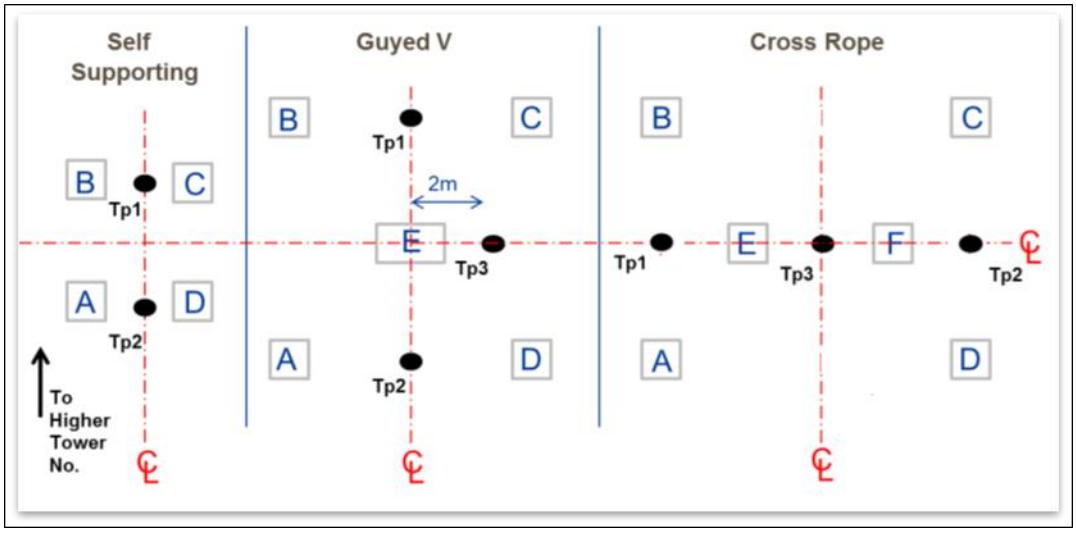

Figure 2: Test pit positions as related to tower type

ESKOM COPYRIGHT PROTECTED

When downloaded from the WEB, this document is uncontrolled and the responsibility rests with the user to ensure it is in line with the authorized version on the WEB.

Dynamic Cone Penetrometer (DCP) – **If required;** DCP tests provide insight into the stiffness of the soil column and are correlated to the test pits to provide an understanding of the soil performance as related to the stratigraphy noted in the test pit profiling.

DCP equipment must be selected according to the anticipated soil type (i.e. sand or clay). DCP stiffness penetration rates are correlated to Estimated Allowable Safe Bearing Pressure (EASBP) to allow for a measure of bearing capacity of the soil.

a) DCP test provide insight into the stiffness of the soil at shallow depths. The maximum depth to which a DCP should be applied is approximately 1.5m – 2m, beyond which the reliability of the data may be compromised

b) DCP tests are conducted adjacent to test pits (no more than 1m away).

c) DCP tests are conducted in 90 degree angles

d) The DCP must be calibrated, therefore the "zero" reading must be noted

e) For foundation – the number of blows per 300mm of penetration is recorded, to the required depth

f) For roads – the amount of penetration (in mm) is recorded per 5 blows

g) Lifting of the hammer must be done slowly and released to allow a "free falling" action of the hammer

h) It must be noted that the DCP apparatus refuses on solid materials such as hardpan layers and will also refuse in gravels and pebbles. Therefore a DCP must not be used in areas where stiffness is needed for greater depths or in areas where boulders and cobbles are present.

i) DCP data is recorded and submitted with the test pit profile information.

j) DCP positions are noted relative to the test pit positions (co-ordinates are provided and layout representation with test pit positions)

k) DCP data is correlated to Estimated Allowable Safe Bearing Pressure (EASBP) which is the factored bearing capacity of the soil

4.1.4 Larger/Complex Geotechnical Investigations

This section is applied to larger/ complex geotechnical investigations which require more detailed investigation works. This section outlines the process and considerations for compiling a geotechnical investigations scope of works and is not prescriptive.

For larger/complex geotechnical investigations the **Contractor** will be provided with a scope of works by the **Employer**, the scope of works will be tailored to the project specifications and required outputs.

4.1.4.1 Inputs required for Larger/Complex Geotechnical Investigations

To effectively conduct geotechnical investigations and to ensure that the investigations meet the project requirements, minimum information (where available) must be provided to the engineering geologist/geotechnical engineering that is scoping and/or executing the fieldworks:

a) Project background and associated documentation (e.g. URS/ROC/ Technical Specification/Works Information)

b) Regional site location (province, town)

c) Local site location (co-ordinates of structures are preferred)

d) Level of geotechnical investigation required (see section 4.1.2)

e) Servitude information – length of powerline, corridor width

f) Proposed structure details i.e. size, anticipated loading, design life

g) Known environmental information including Buffer zones, proximity to water courses, heritage sites etc

h) Existing information on temporary and permanent structures in the area

ESKOM COPYRIGHT PROTECTED

When downloaded from the WEB, this document is uncontrolled and the responsibility rests with the user to ensure it is in line with the authorized version on the WEB.

i) Existing geotechnical information and/or previous reports

j) Previous/Current land use

k) Adjacent site uses

l) Site accessibility and access requirements (access roads, inductions, permits etc.)

m) Perceived Limitations – access, heights, clearances, widths, topography

n) Schedule and time frames

o) Budget allocation (where applicable)

4.1.4.2 Larger/Complex Geotechnical Investigation Methodology

a) Site Walkdown – is used to identify and verify the existence of pertinent geological, landform and infrastructural features which are either on or adjacent to the servitude and may have impact on the **Employers** infrastructure. As a minimum, the **Contractor** must use the relevant maps and the site walkdown to identify areas where problem soils and hazardous geological terrain (dolomitic ground) will require tailored geotechnical testing.

b) Desk Study – a desk study is a review and consolidation of all available literature and relevant information for the proposed site/servitude. This includes (but is not limited to) geological maps, aerial photographs, survey information, previous published literary works, monitoring station data, construction records, sourced proprietary information and geo-spatial information.

c) Geotechnical Field Investigations – the geotechnical investigation fieldworks comprise of field tests and laboratory investigations. The works are scoped and conducted by a professionally registered engineering geologist/geotechnical engineer; and/or suitably qualified practitioner. Site investigations are planned and executed in accordance with “South African Institution of Civil Engineering - Geotechnical Division: “Site Investigation Code of Practice, 1st Edition” (2010); South African National Standards (SANS); and/or other pertinent national/international governing standards, regulations, norms and notices. The scope is dependent on the investigation requirement and/or the inputs required for the civil engineering design.

The approach to executing geotechnical field investigation includes (*as extracted from 240-57127951*):

1) The geotechnical engineer/engineering geologist; and/or suitably qualified practitioner; familiarises themselves on the client/project requirements and the geological history of the area (where applicable/available),

2) A test layout is produced based on the site layout provided by the client. This layout will aim to provide test numbers and locations. Test layouts must consider existing services. Test numbers must also comply with accepted guidelines, standards and codes of practice for data acquisition and data spread.

3) Necessary safety files and permits are completed. Required inductions are completed.

4) In areas where potential existing services may occur or voiding is present, geophysical tests are adopted to ensure these are located and avoided.

5) Intrusive test are conducted, the intrusive tests are conducted through the soil and/or rock layers as required. The required plant for the intrusive testing is determined by the depth of testing and the anticipated hardness of the material.

6) Upon excavation, the soil and/or rock is classified using accepted guidelines, standards and best practise.

7) Soil/Water/Rock samples are collected and labelled according to accepted guidelines, standards and best practise; and transported to a SANAS accredited laboratory.

8) All excavations must be reinstated in such a manner to prevent differential settlements (unless an open excavation is required for in-situ observations).

ESKOM COPYRIGHT PROTECTED

When downloaded from the WEB, this document is uncontrolled and the responsibility rests with the user to ensure it is in line with the authorized version on the WEB.

9) All fieldworks must comply with the OSH act and the governing Health Safety and Environmental practises for the applicable site/s.

d) Field Investigation Tools:

1) Surveys (including geophysical, topographical, bathymetric etc.) – various types of surveys may be implemented to determine the topography of the test area and identify pertinent features such as position of sub-surface utilities. Survey information can also be used to determine test positions.

2) Test Pits – test pits are excavated and profiled at the site (in-situ). Test pits provide information for soil layers (stratigraphy), seepage/groundwater presence, identification of geological features, and indication of slope stability and allow for sample acquisition for laboratory testing. Test pits are logged according to accepted standards and guidelines. All soil profiling is conducted in accordance with guidelines outlined in: Jennings, J.E, Brink, A.B.A, & Williams, A.A.B "Revised Guide to Soil Profiling for Civil Engineering purposes in Southern Africa" Trans. S.A.I.C.E, Vol. 15, No. 1, pp 3 – 12 (1973) (or applicable accepted profiling guideline).

3) Borehole Drilling – boreholes allow for the profiling of materials to greater depth and/or in difficult ground conditions. In-situ tests can be conducted during borehole excavation for groundwater intersections and ground stiffness determination. Cores are retrieved, stored and logged according to accepted standards and guidelines.

4) In-situ soil and seepage tests – various in-situ soil and seepage tests provide an indication of soil behaviour, strength and permeability. Examples of these tests include percolation tests for in-situ determination of permeability, hand vane shear test for in-situ determination of cohesions and friction angles, Schmidt hammer tests for the uniaxial compressive strength of rock.

5) Laboratory Testing – tests are done to inform on the prevalent soil properties i.e. soil state, resistivity, pH, conductivity etc. Laboratory tests are prescribed based on site specific conditions. Tables 1 and 2 below have been taken from Franki: "Guide to Practical Geotechnical Engineering in Southern Africa, 4th Edition" (2008) and provide an outline on some information laboratory tests provide. The tables do not contain all laboratory tests available but highlight those most commonly used.

Table 1: Planning Soil Investigations on Stable Soil Profiles above the Water (Byrne, et. al., 2008)

Parameter	Field Test	Laboratory Test
Description of Soil Profile	Test pits Auger Trial Holes Boreholes with SPT Seismic survey	
Description of Soil Profile	In situ tests – DCP /DPSH/ SPT/CPTU In-situ profiling of trial holes/test pits Sand replacement tests	Density of undisturbed samples (oedometer)
Consistency of soil profile	Undisturbed samples from auger holes/test pits/borehole Vane shear tests in boreholes/trial hole	Undrained triaxial Unconfined compression
Undrained Shear Strength	Undisturbed samples from auger holes/test pits/borehole	Drained triaxial Drained shearbox Undrained triaxial with measure of pore water pressure

ESKOM COPYRIGHT PROTECTED

When downloaded from the WEB, this document is uncontrolled and the responsibility rests with the user to ensure it is in line with the authorized version on the WEB.

Parameter	Field Test	Laboratory Test
Effective angle of friction – φ' Effective cohesion – c'	Cross-hole jacking/plate load/ pressure meter Small strain stiffness – SASW dilatometer	Oedometer Triaxial with local strain measurement Bender element
Modulus of compressibility (stiffness at appropriate strain level)	Disturbed samples from auger holes/test pits/borehole	Grading analysis + Atterberg Limits + Moisture content = Foundation Indicator
Index properties	Test pits Auger Trial Holes Boreholes with SPT Seismic survey	Density of undisturbed samples (oedometer)
Permeability	Undisturbed samples from auger holes/test pits/borehole CPTU Lugeon testing	Falling or constant head permeability
Collapse	Undisturbed samples from auger holes/test pits/borehole	Double oedometer/collapse potential
Heave	Undisturbed samples from auger holes/test pits/borehole	Double oedometer swell under load/ index testing (including hydrometer) on disturbed samples
Level of water table	Percolation test – in situ	Degree of saturation
Soil suction pressure	Filter paper test	

Table 2: Planning Soil Investigations in Saturated, Variable Soils (Coastal Areas/Adjacent to Water Courses) (Byrne, et. al., 2008)

Parameter	Field Test	Laboratory Test
Description of soil profile	Borehole with SPT and/or rotary drilled cores	
Consistency of soil profile	DPSH CPT/CPTU Borehole with SPT	
Undrained Shear Strength	Vane shear tests in borehole Correlation of vane shear tests with in-situ penetrometer tests Recover undisturbed samples from borehole	Undrained triaxial tests Unconfined compression tests
Drained shear strength Effective angle of friction – φ' Effective cohesion – c'	Recover undisturbed samples from borehole Correlation of vane shear tests with in-situ penetrometer tests (for sandy soils)	Drained triaxial test Drained shear box test Undrained triaxial test (with measure of pore water pressure)
Modulus of compressibility (stiffness at appropriate strain level)	Pressuremeter tests Correlation with in –situ penetrometer tests Small strain stiffness - SASW	Oedometer tests Triaxial tests with local strain measurement

ESKOM COPYRIGHT PROTECTED

When downloaded from the WEB, this document is uncontrolled and the responsibility rests with the user to ensure it is in line with the authorized version on the WEB.

Parameter	Field Test	Laboratory Test
Index property tests	Disturbed samples from borehole	Grading analysis + Atterberg Limits + Moisture content = Foundation Indicator
Permeability	Undisturbed samples from borehole CPTU Lugeon test	Falling Or constant head permeability
Collapse	Undisturbed samples from borehole	Double oedometer Collapse potential test
Heave	Undisturbed and/or disturbed samples from borehole	Double oedometer Swell under load test Index property tests on disturbed samples
Level of water table	Drill a borehole and installation of piezometer	

4.1.5 Geotechnical Investigations for Pressure Grout Injected Micropiles

Where specialised grout injected anchor foundation systems is being installed, a more applicable geotechnical investigation for this type of anchor must be done with minimum requirements entailing the following:

a) An investigative hole must be drilled next to foundation to be installed and flushed with water only, in order to establish the geotechnical conditions. From the changes of drilling rates, the depths and consistency of layers can be determined.

b) The rate of drilling and continuous grout pressure must be recorded for each hole drilled, including all installation information that is: anchor type, size, diameter, depth, etc.

c) From the pumped out suspension some characteristics of the soil/rock can be determined and recorded for the layers as encountered (as per applicable chip logging guideline). That is:

   1) For soil: a) a clay or sandy soil, b) hard or soft soil, c) the colour etc.,

   2) For rock: d) hard or soft rock, e) flushed out as powder, chips or sandy grains, f) colour etc.

d) All this information must be logged for every drilled hole of the foundation. If there are differences between the investigation hole and the actual anchor holes of the foundation, a further investigation hole on the opposite side of the foundation can be drilled to determine more accurate information of the geotechnical conditions.

e) Soil frictional /shear values and or strengths and other geotechnical conditions influencing the anchor performance shall be confirmed by a minimum of 10% anchor tests as per specification before foundation installation commence.

4.1.6 Geotechnical Investigation on Conventional Drilled Foundations

Soil /rock design parameters for final design and construction of drilled foundations are determined by pile tests, foundation tests or comprehensive soil /rock investigations as described above. The **Contractor** is fully responsible for the final foundation designs.

Geotechnical Investigations for drilled foundation is based on the type of drilling being implemented, the required geotechnical inputs. The type of geotechnical investigations conducted will be outlined with the project specification/ geotechnical investigation scope of works.

ESKOM COPYRIGHT PROTECTED

When downloaded from the WEB, this document is uncontrolled and the responsibility rests with the user to ensure it is in line with the authorized version on the WEB.

4.1.7 Specialist Geotechnical Conditions

Not all geotechnical investigations follow the same framework of investigation as outlined above. Some ground profiles require specified investigation strategies. These must be tailored to the anticipated problem soil/ potential geological hazard to be encountered. These geotechnical investigations are usually guided by legislation and/or national/international standards; as well as industry best practice.

These types of geological conditions require specialist foundation designs/remediations which are determined on a case by case basis. The **Contractor** will propose a viable ground remediation/foundation solution. The solution must be reviewed and accepted by the **Employer** prior to implementation. Some of the specialist geotechnical conditions mentioned below have national guidelines and legislation which determine the investigation approach and strategy.

These special geotechnical conditions include:

a) Dolomitic Land – prone to land subsidence and sinkhole formation

b) Dispersive Soils – prone to formation of erosion gullies

c) Collapsible Soils – prone to formation of erosion gullies

d) Heaving Soils – prone to uplift

e) Geotechnical Investigations in Environmentally sensitive areas – wetlands, buffer zones or protected areas

f) Zones adjacent to or underlain by Mining Activity – depth of mining below structure foundation must be determined to understand impact of applied load on overburden rock and soils, to prevent collapse.

The above mentioned special geotechnical conditions must be scoped and executed on a project specific basis. Due to the sensitivity of these construction environments, scope and execution of these scopes must be conducted by a professionally registered engineering geologist/geotechnical engineer (these need not be one in the same).

4.1.8 Soil Nominations

The **Contractor** provides soil nominations based on the geotechnical investigation parameters acquired above. For standard geotechnical investigations, the **Contractor** submits signed foundation-soil type nomination list and accompanying **Contractor's** soil profile log sheets (Annex D) including laboratory results (where applicable) to the **Design Engineer** for acceptance. For larger/complex geotechnical investigations, the **Contractor** submits deliverables as per the scope of works provided. Documents are signed by a registered professional.

For the purposes of soil nominations, the following technical definitions shall apply:

a) **Type '1' Soils** - competent soil with equal or better consistency (strength or toughness) than dense cohesionless soils or stiff cohesive soils above the water table. This soil must be well graded i.e. broad balanced texture (variable constituent particle sizes).

b) **Type '2' Soils** - competent soil with equal or better consistency (strength or toughness) than medium dense to dense cohesionless soils or firm to stiff cohesive soils above the water table. Type '2' soils are less competent than that seen in Type '1'.

c) **Type '3' Soils** - dry loose cohesionless soil or very soft to soft cohesive soil.

d) **Type '4' Soils** - submerged cohesionless and cohesive soils. This includes all soils below the permanent water table, including soils below a re-occurring perched water table, or permeable soils in low-lying areas subjected to confirmed seasonal flooding.

e) **Soft Rock** - weathered or decomposed soft continuous fractured rock but not very/extremely fractured and including rock of any other description which meets the strength requirements for classification as per clause 4.2.3 (table 5).

ESKOM COPYRIGHT PROTECTED

When downloaded from the WEB, this document is uncontrolled and the responsibility rests with the user to ensure it is in line with the authorized version on the WEB.

f) **Hard Rock** - hard to very hard solid or moderately fractured continuous solid rock and including hard to very hard rock of any other description which meets the strength requirements as per clause 4.2.3 a).

Cohesive soils classified as Type '1' and Type '2' soils must undergo soil laboratory testing to discount problem soil behaviours. If no testing is done on cohesive soils then the soil is nominated as a Type '3' with adequate discretionary reasoning by the residing professionally registered person and acceptance by the Employer.

Due to the fact that combinations of two or more of the soil or rock classifications as described in above could occur at any one foundation position, including rock boulders in a soil matrix, the soil or rock nomination in terms of one of the six classifications shall then be conservatively based on the load transfer capability in terms of clause 4.2.3 of the soil and/or rock encountered over the depth of influence of the approved foundation system. If a combination of soil types in found within the test pit profile then the nomination will be the predominant layer taking into account the founding system and the foundation loading.

4.1.9 Soil Nomination Amendments

Soil nomination amendments are applicable when the soil conditions vary from those anticipated. Where Soil nominations change by one category, the change can be approved by the site representative. Changes of more than one category must be approved by the design engineer.

The tables 3 and 4 below provide the guidelines and processes for soil nominations.

Table 3: Soil Nominations: Type change by single soil/rock type

Scenario	Accepted By	Required Documentation
Type 1 to Type 2 (or vice versa)	Eskom Site Representative and Contractor Representative	Guideline for notification of Engineering Change (Annex D)
Type 2 to Type 3 (or vice versa)	Eskom Site Representative and Contractor Representative	Guideline for notification of Engineering Change (Annex D)
Type 3 to Type 4 (or vice versa)*	Eskom Site Representative and Contractor Representative	Guideline for notification of Engineering Change (Annex D)
Soft Rock to Hard Rock (or vice versa)	Eskom Site Representative and Contractor Representative	Guideline for notification of Engineering Change (Annex D)

For type variance by single nomination – **Eskom site representative** will be required to take photographs of the excavation requiring the soil nomination change. Photographs should be taken in clear lighting to adequately identify soil colouring, photograph clarity must be sufficient to identify major soil features (i.e. layering), photographs must include tape measure to identify depth of layers.

**Type 4 to type 3 nomination changes must involve the Design Engineer in decision making.*

Contractor must submit the completed *Guideline for notification of Engineering Change Forms* and photographic records to the **Eskom Site Manager** along with the concession/early warning paperwork, and design change paperwork (where applicable). If the **Eskom Site Representative** and the **Contractor** do not agree on the proposed change, the **Design Engineer** is consulted.

Table 4: Soil Nomination: Type change by more than on soil or rock type

Scenario	Accepted By	Required Documentation
Type 1 to Type 3 (or vice versa)	Design Engineer	Guideline for notification of Engineering Change (Annex D)
Type 1 to Type 4 (or vice versa)	Design Engineer	Guideline for notification of Engineering Change (Annex D)
Type 2 to Type 4 (or vice versa)	Design Engineer	Soil Guideline for notification of Engineering Change (Annex D)

ESKOM COPYRIGHT PROTECTED

When downloaded from the WEB, this document is uncontrolled and the responsibility rests with the user to ensure it is in line with the authorized version on the WEB.

Type 4 to Rock (or vice versa)	Design Engineer	Guideline for notification of Engineering Change (Annex D)
Rock to Soil (or vice versa)	Design Engineer	Guideline for notification of Engineering Change (Annex D)

For type variance by more than 1 nomination – **Eskom site representative** will be required to take photographs of the excavation requiring the soil nomination change. Photographs should be taken in clear lighting to adequately identify soil colouring, photograph clarity must be sufficient to identify major soil features (i.e. layering), photographs must include tape measure to identify depth of layers. Completed *Guideline for notification of Engineering Change Forms* and photographic records must be submitted to the **Eskom Site Manager** for record purposes.

The **Eskom Site Manager** (or as otherwise delegated) forwards the request form and the photographic evidence to the **Design Engineer** to take a decision on the necessary changes.

4.2 Foundation Design

4.2.1 Foundation Design Loads

The ultimate simultaneous tower foundation design loads shall be used for foundation design purposes. The foundation loads shall be further factored upwards for foundation design by a load factor given in the line specification. The foundations shall in addition be designed for the most critical cases that would result from the occurrence of the maximum permissible tolerance situations as listed in clause 4.7.3 The **Contractor** must submit detailed design drawings and calculations for review and acceptance.

4.2.2 Soil and Rock Classifications

a) **Hard Rock:** hard to very hard solid or moderately fractured continuous rock, and including hard to very hard rock of any other description which meets the strength requirements of clause 4.2.3 (Table 5).

b) **Soft Rock:** weathered or decomposed very soft to soft continuous rock, and including rock of any other description which does not satisfy the requirements for classification under clause 4.2.2 (a) above.

c) **Type '1' soils**: competent soil with equal or better consistency (strength or toughness) than dense cohesionless soils or stiff cohesive soils above the water table. This soil must be well graded i.e. broad balanced texture (variable constituent particle sizes) with high average combinations of undrained shear strength and internal angle of friction, with minimum values of 80kN/m² and 30° respectively. The minimum natural specific weight shall not be less than 17kN/m³.

d) **Type '2' soils**: competent soil with equal or better consistency (strength or toughness) than medium dense to dense cohesionless soils or firm to stiff cohesive soils above the water table. Type '2' soils are less competent than that seen in Type '1'. The minimum undrained shear strength shall be 40kN/m², and the minimum natural specific weight shall not be less than 15.5kN/m³.

e) **Type '3' soils:** dry loose cohesionless soil or very soft to soft cohesive soil

f) **Type '4' soils:** submerged cohesionless and cohesive soils. This includes all soils below the permanent water table, including soils below a re-occurring perched water table, or permeable soils in low-lying areas subjected to confirmed seasonal flooding.

4.2.3 Geotechnical Design Parameters

Table 5: Geotechnical design parameters for rock

Parameters	Soft rock	Hard rock
Allowable toe and bearing pressure at foundation depth	800 kPa.	2 000 kPa.

ESKOM COPYRIGHT PROTECTED

When downloaded from the WEB, this document is uncontrolled and the responsibility rests with the user to ensure it is in line with the authorized version on the WEB.

Rock Frustum angle	37º	45º
Skin shear friction - concrete to rock	135 kN/m²	350 kN/m²
Minimum dry density of backfill material	≥1700 kg/m³	≥1700 kg/m³

Table 6: Geotechnical design parameters for soil types '1' and '2'

Parameters	Type '1'	Type '2'
Allowable soil bearing pressure	300 kPa	150 kPa
Allowable toe bearing pressure	375 kPa	200 kPa
Frustum angle for suspension towers	30º	20º
Frustum angle for strain towers	25º	15º
Undrained shear strength	80 kN/m²	40 kN/m²
Minimum dry Density	1700 kg/m³	1550 kg/m³
Density of reinforced concrete	2400 kg/m³	2400 kg/m³

Table 7: Geotechnical design parameters for soil types '3' and '4'

Parameters	Type '3'	Type '4'
Allowable soil bearing pressure	100 kPa	50 kPa
Allowable toe bearing pressure	125 kPa	65 kPa
Frustum angle for suspension towers	0º	0º
Frustum angle for strain towers	0º	0º
Minimum dry Density	1400 kg/m³	1000 kg/m³
Density of reinforced concrete	2400 kg/m³	1400 kg/m³

Note: For allowable soil bearing pressures and allowable toe bearing pressures, use the tabled pressure or 80% of the ultimate tested bearing pressures determined from appropriate tests.

4.2.4 Drilled Foundations: geotechnical design parameters

Soil /rock design parameters for final design and construction of drilled foundations shall be determined by pile tests, foundation tests or comprehensive soil /rock investigations as described above. The **Contractor** is fully responsible for the final foundation designs. As a guide only, "average" parameters are set out below.

a) In type '1' or type '2' soils, a skin friction with a maximum of 80 kPa in a type '1' soil, and a maximum of 40 kPa in a type '2' soil, may be used. The skin friction values that are used shall not exceed 80% of the ultimate friction determined from appropriate soil tests in accordance with section 4.1.

b) In soft rock, when non-shrink grout or concrete is utilised, a maximum skin friction of 135 kPa may be used in all piles or anchors. A 37° frustum shall be used to check an anchor group pull out resistance. The skin friction value shall not exceed 80% of the ultimate friction determined from appropriate rock tests in accordance with section 4.1.

c) In hard rock, when non-shrink grout or concrete is utilised, a maximum skin friction of 350 kPa may be used in anchors with a maximum diameter of 150 mm. A 45° frustum shall be used to check anchor group pull out resistance. The skin friction value shall not exceed 80% of the ultimate friction determined from appropriate rock tests in accordance with section 4.1.

ESKOM COPYRIGHT PROTECTED

When downloaded from the WEB, this document is uncontrolled and the responsibility rests with the user to ensure it is in line with the authorized version on the WEB.

d) The depth of any pile(s) in a pile group in soils shall be so calculated to resist the uplift force on the pile or pile group. For a type '1' soil, a 30° frustum for suspension towers, and a 25° frustum for angle strain towers may be assumed. Similarly for a type '2' soil, a 20° frustum for suspension towers, and a 15° frustum for angle strain towers may be assumed. Assumed material densities to be as per clause 4.2.2.

e) No horizontal shear resistance on the piles or pile cap shall be assumed for re-compacted excavated soil. The lateral resistance of undisturbed soil shall be ignored in the top 300mm from ground line, and taken as the lesser of 100kPa or 80% of the permissible bearing determined from appropriate tests from 300mm below ground level to the bottom of the pile cap. If the pile cap is not capable of restraining the entire horizontal base shear, the piles and pile cap shall be designed to resist the shears and moments introduced from the pile cap to the individual piles. A soil bearing pressure of 200kPa in type '1' or 100kPa in type '2' soil shall be allowed under the pile cap. End bearing components for compressive loads shall not be considered in soil replacement type piles with a diameter less than 750mm.

4.2.5 Strength factors for foundation systems

A factored foundation design load may be determined by the inverse of the relevant strength factor for a particular foundation system as indicated in the Table 8 (as adapted from SANS 10280):

Table 8: Strength factors for foundation systems *

Foundation Type	Characteristic strength (R_c) determined by	Strength factor application (Φ_s)	Foundation Factor load application (Inverse of Φ_s)
Planted pole foundations or caisson	Maximum overturning capacity of footing	1,0	1,0
Foundations in compression only	Maximum compressive load capacity of footing	0,9	1,1
Foundations for self-supporting structures (in overturning, compression and tension)	Maximum compressive or tensile load capacity of footing	0,83	1,2
Guy anchor foundations for guyed monopoles and guyed vee structures	Maximum tension capacity of footing	0,75	1,33
Inclined piles in guyed structures[1]	Maximum tension capacity of footing	0,7	1,43
Permanently loaded guy anchor foundations on strain towers	Maximum tension capacity of footing	0,65	1,53
Bundled Wood poles and concrete block back-stays	Maximum tension capacity of footing	0.5	2

* For specialist piles such as continuous flight augured, precast driven, and piles with shaped under reams or bulbs – use Φ_s = 0,75

ESKOM COPYRIGHT PROTECTED

When downloaded from the WEB, this document is uncontrolled and the responsibility rests with the user to ensure it is in line with the authorized version on the WEB.

4.3 Foundation systems

4.3.1 General

a) Before foundation excavation commences the **Contractor** shall submit to the **Project Manager** drawings and relevant design calculations of all the proposed foundations intended to be used, for acceptance by the **Design Engineer**. Acceptance by the **Design Engineer** does not relieve the **Contractor** of his responsibility for the adequacy of the design, dimensions, and details. The **Contractor** shall be fully responsible for his designs and their satisfactory performance in service. A registered Civil Engineer or Civil Engineering Technologist, duly authorised to do so on behalf of the **Contractor**, shall accept responsibility for all foundation designs and drawings submitted to the **Design Engineer**, and shall sign all drawings accordingly. If the **Employer** provides foundation designs and/or drawings, a registered Civil Engineer or Civil Engineering Technologist, acting on behalf of the **Contractor,** shall check and assume responsibility for such designs and/or drawings. All foundation design loads are to be shown on the relevant foundation drawing.

b) No foundation shall be constructed without the **Design Engineer** acceptance. All drawing revisions shall be submitted to the **Design Engineer** before being issued for construction purposes.

c) Only with the specific permission of the **Design Engineer**, may more than one design per soil or rock type of any foundation system for a tower type be utilised.

d) A ground slope of up to and including 12 degrees to the horizontal in any direction shall be assumed at all foundation positions for design purposes.

e) The **Project Manager**, for specific applications, may consider proprietary foundation systems not covered by this specification.

f) No metals shall be in direct contact with the soil for any foundation systems.

4.3.2 Pad and Pier/Column Foundations for Self Supporting Towers

a) The foundations shall be designed to withstand, with less than 20 mm of differential settlement or displacement, the maximum foundation reactions resulting from the withstood loadings stated in the Works Information, with the dead weight of the tower included at unity factor of safety.

b) The foundations shall be designed for the maximum combinations of compression, uplift and horizontal shear forces. In addition, a 250 mm minimum and 650 mm maximum projection of the pier and stub above ground level shall be incorporated in the design unless special approval has been granted by Eskom. This is based on 500mm leg extension increments. Only the stub is encased in concrete; the tower steel above the diagonal members is not to be encased.

c) All concrete subjected to tension, where the permissible tensile stress is exceeded, shall be adequately reinforced with deformed reinforcing steel bars. The design shall be in accordance with the requirements of SANS 10100. The maximum permissible tensile stress in the concrete shall be 1.75 MPa. Piers shall be reinforced for their full length with the reinforcing properly anchored in the pad.

d) Pads designed with a full 45° core may be utilised (bell-type foundation). All faces of such a core where the permissible tensile stress in the concrete is exceeded are to be adequately reinforced to prevent the development of tension cracks.

e) The foundation shall be designed to resist the vertical compression load at the bottom of the foundation. The foundation shall be checked to ensure that "punch-through" of the stubs shall not occur. The maximum soil bearing pressure allowed due to the vertical compressive load, plus the mass of the foundation, less the mass of the soil displaced by the foundation, shall not exceed the values specified in clause 4.2.3 for the soil type involved.

f) In addition to the vertical compression and tension loadings, the foundations shall be designed for the overturning moment and resultant soil toe pressure due to the remaining horizontal base shears applied at the top of the foundation, including the maximum foundation projection. The maximum soil toe pressure shall not exceed the value specified in clause 4.2.3 for the soil type involved.

ESKOM COPYRIGHT PROTECTED

When downloaded from the WEB, this document is uncontrolled and the responsibility rests with the user to ensure it is in line with the authorized version on the WEB.

g) The foundation shall be designed to resist the vertical uplift load, by means of the mass of the foundation plus the nett mass of the soil frustum acting from the bottom of the foundation base. Bracing shear forces shall be considered in the pier design of towers.

h) The structural steelwork shall be firmly keyed into the concrete by means of bolted-on cleats. The load shall be transferred by means of bolted-on cleats where the bolts shall have no thread in the shear planes. The cleats shall be so positioned on the structural steel member, so as to limit punching shear in the concrete due to both tension and compression load cases. When calculating the number and size of cleats required the maximum contact pressure between cleat and concrete shall not exceed 10MPa. The number of cleat bolts required shall be calculated for the ultimate shear stress with no thread in the shear plane. Galvanising of stubs and cleats shall be in accordance with SANS 121:2011 / ISO 1461. Galvanising thickness to be minimum of 105 microns (medium coating) as per Annex G.

i) The least lateral dimension'd' of a pier/column shall not be less than the greater of 400mm or L/5, where 'L' is the lesser of the vertical height measured from top of pad level to the top of the concrete pier, or the vertical height measured from founding level to the top of the concrete pier when a pad is not utilised. For circular pier sections 'd' represents the diameter and for square or rectangular sections 'd' represents the length of the shortest side.

4.3.3 Pad and Plinth Foundations for Guyed Tower Centre Support

a) The foundations shall be designed to withstand, with less than 20 mm of settlement, the maximum foundation reactions resulting from the loadings stated in the standard, with the ultimate load.

b) The minimum depth of the mast support foundation(s) shall be 750 mm in type '1' and type '2' soil, and 1000 mm in type '3' and type '4' soil. The soil at the bottom of the foundation shall resist all stresses resulting from the vertical compressive loads and toe pressures due to horizontal shear forces. The mass of the foundation less the mass of the soil displaced by the foundation shall be included in the vertical load applied. The maximum soil toe pressure shall not exceed the values specified in clause 4.2.3.

c) The foundations shall be designed for the maximum combinations of compression and horizontal shear forces. In addition, a 1500mm projection of the plinth above ground level in the case of cross rope suspension type towers, and a 650mm projection in the case of guyed 'V' type towers, shall be incorporated in the design to allow for leg extension increments.

d) All concrete subjected to a tension where the permissible tensile stress is exceeded, shall be adequately reinforced with steel reinforcing bars in compliance with SANS 920. The design shall be in accordance with the requirements of SANS 10100.

e) Anchoring of the tower bases of guyed "V" towers shall be by means of anchor bolts. The maximum shear on anchor bolts shall be 0.6 times the ultimate tensile strength of the bolt. If the anchor bolts must resist compression loads from the base plate, the compression load shall be resisted by mechanical anchorage, and not by adhesion between steel and concrete, unless deformed bars are utilised for anchor bolts.

f) In some cases of soil type 1 to 4 pad foundations where rock is encountered at shallower depth than required by the soil foundation, a combination of rock anchors (to provide the additional uplift resistance) can be utilised.

4.3.4 Drilled Foundations

The **Contractor** shall have equipment for, and personnel knowledgeable and experienced in, the evaluation and construction of this type of foundation.

a) General

1) The **Contractor** shall allow for the testing of two separate piles/anchors in each of the soil or rock types for which they have been designed. Pile/anchor tests as described in clause 4.8 if so required by the **Design Engineer,** are to be successfully tested to the **Design Engineer's** satisfaction prior to construction of cast-in-situ pile/anchor foundations.

ESKOM COPYRIGHT PROTECTED

When downloaded from the WEB, this document is uncontrolled and the responsibility rests with the user to ensure it is in line with the authorized version on the WEB.

2) All design clauses in 4.2.3 relating to drilled concrete foundations shall apply.

3) Piles shall be designed to limit ground line vertical deflection, at maximum loadings, to less than 12 mm.

4) The minimum centre to centre spacing of any two piles in a group of piles shall be three pile diameters of the pile with the larger diameter, unless otherwise accepted by the **Design Engineer.**

5) The structural steelwork shall be firmly keyed into the concrete by means of bolted-on cleats. The adhesion between steel and concrete shall not be relied upon to transmit the load to the foundation. The cleats shall be so positioned on the structural steel member, so as to limit punching shear in the concrete due to both tension and compression load **cases. When calculating** the number and size of cleats required the maximum contact pressure between cleat and concrete shall not exceed 40% of the characteristic strength. The number of cleat bolts required shall be calculated in accordance with SANS 10162-1: 2005.

6) Pile caps shall have a minimum thickness and width of 750mm for loads above 400kN.

b) Single cast-in-situ piles

Foundations utilising one cast-in-situ concrete pile will be considered by the **Design Engineer** if the following criteria are met:

1) If a pile cap is not utilised, the pile shall have a minimum diameter of 350 mm in order that the structural steel attachment of the tower can be accommodated without conflict with the reinforcing steel. The option of raking with the correct set to reduce shear may be considered should a pile cap be utilised, the minimum pile diameter shall be 300 mm.

2) The pile shall be constructed vertically, and shall be designed for the maximum combinations of uplift and compression loadings, and the total horizontal base shear forces associated with the vertical loadings. Total horizontal shear applied at the top of the foundation, including the 650 mm maximum projection above ground level, is to be included. Lateral load design bending moments shall be calculated taking into account possible plastic soil deformation. Raked piles will be accepted upon submission of all method statements and review of calculations and drawings by the **Design Engineer** for acceptance.

3) The pile shall be designed to ensure that it acts as a rigid pile. Horizontal deflection at the top of the projected pile under ultimate loading shall be limited to 5 mm.

4) Single in line guy anchor piles shall only be designed for type 1 soil and with an additional load factor of 1.2, a minimum diameter of 300mm and meet all the requirements of **clauses** 4.4.3 and 4.2.3.

5) The lateral pressure on the leading face of the cap in the rock, as well as the friction on the two side faces in the rock shall be 135kPa for soft rock and 300kPa for hard rock or 80% of the permissible value determined from appropriate tests.

6) Piles shall be tested as to clauses 4.8.

c) Multiple cast-in-situ pile

Foundations utilising multiple cast-in-situ piles of a minimum diameter of 300 mm, will be considered by the **Design Engineer** if the following criteria are met:

1) A minimum of two vertical piles per leg are used, connected to the structural steelwork by means of a reinforced concrete pile cap. Raked piles will be accepted upon submission of all method statements and review of calculations and drawings by **Design Engineer**.

2) The piles and pile cap shall be designed for the maximum combinations of uplift and compression loadings, and the total horizontal base shear forces associated with the vertical loadings, including leg shear. Lateral load design bending moments shall be calculated taking into account possible plastic soil deformation.

ESKOM COPYRIGHT PROTECTED

When downloaded from the WEB, this document is uncontrolled and the responsibility rests with the user to ensure it is in line with the authorized version on the WEB.

3) The piles shall be reinforced for their entire lengths in order to resist the applied axial and bending forces and sufficient reinforcing hoops shall be provided to support the vertical reinforcing. The reinforcement shall extend into the pile cap sufficiently, and shall be suitably anchored to ensure full transfer of forces from pile cap to pile. The pile cap shall be reinforced to withstand the shear and bending forces applied by the structural steelwork.

4) The minimum pile centre to centre spacing shall be three times the pile diameters. Allowance shall be made for the smaller group effect when two or more piles, with a centre to centre spacing of less than three pile diameters, are used in a group.

d) Rock Anchors

Foundations utilising grouted rock anchors will be considered by the **Design Engineer** if the following criteria are met:

1) A minimum of four vertical rock anchors shall be used and connected to the structural steelwork by means of a reinforced concrete pile/anchor cap. Inclined rock anchors shall not be used without the **Design Engineer's** prior acceptance.

2) Rock anchor foundations shall be designed to anchor and accommodate rock up to 2.5m depth below the ground surface with the tower leg/stub in a reinforced column similar to the pad and column foundation.

3) The rock anchors shall be designed to resist the full axial forces imparted by the maximum combinations of uplift and compression loadings, and additional axial loads due to the total horizontal base shear. The design shall incorporate a 650 mm maximum projection of the foundation above ground level. The rock anchors shall not carry any horizontal shear load.

4) The pile/anchor cap shall be designed to resist the total horizontal base shear. No horizontal shear resistance shall be assumed for re-compacted excavated soil. The base of the pile cap shall be extended to a minimum of 150 mm below the top of sound rock over its full area irrespective of horizontal shear resistance requirements.

5) The rock anchors shall be reinforced for their entire length in order to resist the applied axial forces and the reinforcing extends into the pile cap sufficiently and is suitably anchored to ensure full transfer of forces from pile/anchor cap to anchor(s). The cap shall be reinforced to withstand the shear and bending forces applied by the structural steelwork. The rock anchor reinforcing steel shall be a minimum diameter of 25mm and de-bonded, by a method accepted by the **Design Engineer** for a length of 100 mm above and 300 mm below the pile cap base.

6) Rock anchors shall only be installed in hard rock, or competent soft rock. Proposals to utilise rock anchors in materials such as shale etc. shall be specifically accepted by the **Design Engineer** after a pile/anchor test, as described in clause 4.8, has been conducted. An additional test to verify that the pile cap will resist the entire horizontal base shear may also be required if so specified by the **Design Engineer**. The lateral pressure on the leading face of the cap in the rock, as well as the friction on the two side faces in the rock shall be 135kPa for soft rock and 300kPa for hard rock or 80% of the permissible value determined from appropriate tests.

7) The use of grout mixes, including proprietary mixes, shall be accepted by the **Design Engineer** prior to the use of such. Documented evidence of use in other similar applications, which have been accepted by a recognised authority, shall be submitted as proof of suitability. In-situ rock anchor testing shall be carried out as specified in clause 4.8.1.

8) Rock anchors with diameter smaller than 85mm shall only be installed in sound competent rock where the holes have uniform diameters, straight sides and special grouts are used (epoxy or similar with 50MPa minimum strength) as approved by the **Design Engineer**. In-situ rock anchor testing shall be carried out as specified in clause 4.8.

ESKOM COPYRIGHT PROTECTED

When downloaded from the WEB, this document is uncontrolled and the responsibility rests with the user to ensure it is in line with the authorized version on the WEB.

9) Allowance shall be made for all possible group effects when two or more anchors, are used in a group. For 40 mm anchors the centre to centre spacing shall be greater than or equal to 500 mm and for 100 mm anchors the centre to centre spacing shall be greater than or equal to 650 mm.

10) Rock anchors shall be tested as to clauses 4.8

11) Inclined rock anchors shall have galvanized anchor bars. To ensure complete compaction of the grout/epoxy, it shall be pumped into the holes from the bottom upwards.

4.4 Guy Anchor Systems

4.4.1 General

a) The Contractor shall be responsible for the type of anchors chosen and the design thereof. Anchors requiring or relying on post tensioning will not be allowed. The design of guy anchors shall include a coating thickness of 105µm (medium coating as per Annex G) on steel link plates (type S355JR steel) with the following minimum cross sectional dimensions for the respective voltages.

1) For **275/400kV** power lines – link plate minimum cross sectional dimensions to be **120 mm width x 25 mm thick**.

2) For **765kV** power lines- the link plate minimum cross sectional dimensions to be 130 mm width x 30 mm thick.

3) All link plate widths to be orientated with the width in a vertically plane. In addition the U-bolts (both U legs in the same angled level plane) should be covered adequately to prevent cattle from being caught.

4) All link plates must be painted with a bitumastic/zinc rich paint/UV resistant 500mm below ground level and 500mm above ground level (subject to approval by **Employer**).

b) Unless otherwise specified, the anchors shall be capable of resisting a tension as stated in the Line Specification, and also satisfy the test requirements as described in clause 4.8 below.

c) Owing to the dissimilarities in anchor performance and conventional foundation performance in uplift conditions, the **Contractor** shall exercise extreme caution in utilising soil / rock parameters stated in clause 4.2.3 for the design of anchors. Full-scale load tests shall be utilised to determine actual soil holding capacities of anchor designs for 5% of installed anchors. The depth of dead man type anchors shall be determined with respect to the dead man and not the attachment point.

d) All steel link plates extending below the ground level, shall be encased in concrete (minimum grade 25MPa/13 mm coarse aggregate) using a 300 mm diameter minimum HDPE (High Density Poly Ethylene) pipe as permanent formwork, The encasement shall be proud of the ground by a minimum of 250 mm with an appropriately smooth trowelled watershed top surface. The concrete in the HDPE encasement shall be vibrated and reinforced with a spiral R6mm dia mild steel reinforcing. The spiral pitch spacings to be ±200mm with ±20mm minimum concrete cover.

e) Steelwork of the guy anchors shall be so selected by the **Contractor** to have the following minimum properties:

All ferrous material representing the final product shall have a minimum Charpy V-notch impact energy of 27 joules at 20°C.

Ductility of all ferrous material at room temperature shall be sufficient to provide a minimum elongation in a gauge length of 5.65√So, including the fracture, of 18 percent. (So = cross section area of the test specimen). **Grade S355JR** steel which, when tested, meets the above requirements may be accepted at the **Design Engineer's** discretion.

f) Guy anchors shall be installed in such a manner that the legs of the U-bolt are in the vertical plane. The design of the hole to fit the U-bolt must be adequately chamfered to cater for the complete profile of the U-bolt. Hole edge chamfering alone is not adequate for the thickness of the link plates used. See also 6.2.3 and Annex H.

ESKOM COPYRIGHT PROTECTED

When downloaded from the WEB, this document is uncontrolled and the responsibility rests with the user to ensure it is in line with the authorized version on the WEB.

g) The total anchor assembly (link plus reinforcing steel) for single in line drilled anchors less than 250 mm in diameter shall be hot dip galvanised. The entire link assembly for single in line drilled anchors greater or equal to 250 mm in diameter shall be hot dip galvanised. All hot dip galvanizing shall be in accordance with SANS 121.

h) The link plate shall be firmly keyed into the concrete by means of bolted-on cleats. The cleats bearing pressure on the concrete shall not exceed 10MPa. When calculating the number and size of cleats required, the number of cleat bolts required shall be calculated in accordance with the bolt grade ultimate strength.

4.4.2 Anchor Blocks (Dead Man Anchor)

Anchors blocks (deadman) shall have a minimum thickness and width (i.e. cross section) of 750mm.

4.4.3 Single Inclines Drilled Pile Anchors

a) Inclined drilled anchors shall be design with of maximum tension capacity of 0.7 (as per 6.17, SANS 10280 Table2) that is 1.43 times the ultimate applied load.

For single in line drilled pile anchors, the following top depths from the surface shall be ignored for anchorage purposes:

1) for rock anchors in hard rock ignore the top 350 mm of the rock profile

2) for rock anchors in soft rock ignore the top 650 mm of the soil profile

3) for soil anchors ignore the top 1200 mm of the soil profile

b) Inclined rock anchors smaller than 150mm dia shall have galvanized reinforcing bars with a minimum dia of 25 mm.

c) Inclined piles in soil shall be a minimum dia of 300mm

d) The vertical distance between the highest point of the foundation and the ground surface shall be a minimum of 250 mm and a maximum of 650 mm.

e) The concrete grout shall be pumped into pile hole from the bottom upwards by means of a tremie pipe extending down the full length of the pile hole. A poker vibrator shall be placed in the bottom of the pile hole prior to any concrete placement and gradually lifted together with the concrete pour.

f) Proof load testing (full scale) is to be done on a minimum of 10% of all in line drilled/inclined pile anchors which will be randomly selected or where required by the **Design Engineer** and **Eskom Site Representative.**

4.4.4 Foundations for concrete or steel poles

a) General

1) The **Contractor** shall be responsible for the design of all foundations for pole structures.

2) The foundations shall be designed to withstand the maximum combination~~s~~ of induced factored moment, compression and torsion loads. The dead weight of the pole shall be included at unity factor of safety.

3) All foundation designs are to be accepted by the **Design Engineer** prior to the utilisation of any such design for pole installation purposes.

b) Testing

1) Prior to the construction of any pole foundations, the **Contractor** shall, if requested by the **Project Manager / Design Engineer** install in each general soil type encountered and at any additional locations, test poles for the purpose of carrying out full scale load tests to determine the moment carrying capacity in each soil type.

2) The test pole and foundation shall not be part of a final foundation.

ESKOM COPYRIGHT PROTECTED

When downloaded from the WEB, this document is uncontrolled and the responsibility rests with the user to ensure it is in line with the authorized version on the WEB.

3) The **Contractor** shall prepare the test procedure, and supply all equipment and personnel to perform the tests. The tests shall be conducted in the presence of the **Eskom Site Representative**.

4) The pole foundation shall be capable of withstanding the full design moment (ultimate moment) for 5 minutes with a displacement at ground level of less than 5 mm.

5) The test shall be continued to failure of either the pole or the foundation i.e. either a creep rate greater than or equal to 2 mm per minute of the pole measured at ground level, or a pole tip deflection greater than or equal to 10° with respect to the original point of intersection of the pole with the ground.

6) Upon completion of the test, the pole shall be either removed or demolished to at least 600 mm below ground level and properly disposed of and ground to be rehabilitated.

4.4.5 Special Foundation Designs

If the geotechnical investigation reveals any other severe or extreme conditions applicable to the construction of the foundations, special foundation designs may be required. For example, these special designs can be applied for the construction of power lines over undermined areas, on severe slopes or foundations subjected to water scour or marshy areas. These foundation designs shall be subject to the acceptance by the **Design Engineer**.

4.5 Concrete and Grouts

4.5.1 General

a) Concrete mix designs shall be proportioned to obtain a specified strength of 25MPa, and a target strength of 35MPa, with a minimum cement: water ratio of 1.8: 1 as per SANS 10100-2. No more than one individual 28 day concrete test cube result from the 4 cube batch shall fall more than 3MPa below the minimum specified strength. For moderate to severe conditions the mix design shall comply with SANS10100-2 where the minimum cement content shall be 340 kg/m3 CEM II or CEM I cement with extenders.

b) Grout mix designs for rock anchors shall be proportioned to attain a specified strength of 35MPa at 28 days with any expansive additives included. The use of epoxy grouts will only be allowed after acceptance by the **Design Engineer**.

c) Water shall be of a potable quality, clean and free from all earthy, vegetable or organic matter, acids or alkaline substances in solution or suspension.

d) The Contractor must account for Alkali Silica Reactions (ASR) i.e. “concrete cancer” in concrete mix designs. In areas where ASR is prevalent, the maximum travel time must not exceed 2 hours.

SAP NUMBER	TECHNICAL CODE	MIX DESCRIPTION	CW (WC) RATIO	28-DAY COMPRESSIVE STRENGTH (MPA)	DESIGN SLUMP (MM)	MAXIMUM TRAVEL TIME (HOURS)	DOLOMITE STONE (kg)		SAND (kg)		CEMENT (kg)	ADMIXTURE (kg)		WATER (kg)
							20mm	14mm	Riversand	Dolomite Crusher Dust	PPC CEM II A-L 52.5N	Plast 500	Optima 1340	
16071689	ULD22	ULTRA LD 25 N 20 2H WC0.53 100 P	1.888 (0.530)	25	100	2	644.0	276.0	744.0	203.0	353.0	1.66	1.34	187.0

ASR is accounted for in the above mix design.

Figure 3: Example of Alkali Silica Reaction (ASR) being considered in concrete design

ESKOM COPYRIGHT PROTECTED

When downloaded from the WEB, this document is uncontrolled and the responsibility rests with the user to ensure it is in line with the authorized version on the WEB.

4.5.2 Cement Types

a) Concrete shall be batched utilising common cement types manufactured in accordance with SANS 50197-1.

b) The minimum cement class used in concrete will be Class 32.5.

c) CEM I - Class 52.5 and accelerating admixtures shall not normally be utilised for concrete batching. Their use will only be considered by the **Design Engineer** in unusual circumstances, in order to expedite tower erection to facilitate conductor stringing. The **Contractor** shall make test cubes and arrange for their testing, to confirm the concrete strength, and obtain acceptance from the **Eskom Site Representative** before proceeding with other activities.

d) Site blending will be acceptable provided the following criteria are met:

1) Proportion of CEM I and Extenders are within industry norms (i.e. maximum 50% replacement for slag and maximum 25% replacement for Fly Ash).

2) The cementitious materials shall be weighted into the mix with an accuracy of 2% or better. In special cases the **Design Engineer** may require that the replacement value indicated in **i)** above be increased.

e) The cement utilised for grout mixes shall be of a “non-shrink” type. Any shrinkage-compensating admixture shall only be used with the Design Engineer’s acceptance.

f) Cement extenders used shall comply with the following SANS specifications:

1) SANS 55167-1:2011: Portland cement extenders, Part 1: Ground granulated blaste furnace slag

2) SANS 50450-1: 2014: Portland cement extenders, Part 2: Fly Ash

3) SANS 53263-1: 2011: Portland cement extenders, Part 3: Condensed silica fume

4) SANS 50197-1: 2013: Portland fly ash cement

g) The use of additives in the concrete mix design must be approved by the **Design Engineer**.

h) Lesser durable concrete mixes (without blenders) can be designed if the contractor proof that no severe conditions exist by analysing the soil along the line for chlorides and sulphates and also testing the concrete aggregate for ASR proneness. These laboratory reports (with results) and tested mix designs and must be submitted to Eskom for approval.

4.5.3 Aggregates

a) Fine and coarse aggregate shall be obtained from sources accepted by the **Design Engineer** and shall be assessed in accordance with SANS 1083 and SANS 2001 CC1.

b) Fine aggregate shall be natural sand or other accepted inert material with similar characteristics, composed of clean, hard, strong, durable, uncoated particles. Fine aggregates shall be free from deleterious amounts of soft, flaky or porous particles, loam, soft shale, clay lumps or organic material.

c) Fine aggregates shall be selected from local sources to provide a reasonably uniform grading of the various size fractions. Fine aggregates having a large deficiency or excess of any size fraction, shall be avoided to the extent practicable.

d) Coarse aggregate shall consist of crushed stone, gravel or other accepted inert material of similar characteristics having hard, strong, durable, uncoated pieces free from deleterious substances.

e) Coarse aggregates up to 26.5/28 mm nominal size may be single-sized stone. Coarse aggregates up to 40 mm nominal size shall be blended consisting of two parts by volume of single-sized 40 mm stone to one part by volume of single-sized 20 mm stone. The content of fine material (less than 4.75/5 mm) in coarse aggregate shall be less than 10% by mass.

ESKOM COPYRIGHT PROTECTED

When downloaded from the WEB, this document is uncontrolled and the responsibility rests with the user to ensure it is in line with the authorized version on the WEB.

f) The bulk void content of fine or coarse aggregate shall not exceed 48%. Aggregate shall not contain any materials that are reactive with any alkali in the aggregate itself or in the cement, the mixing water or in water in contact with the finished concrete or grout in amounts sufficient to cause excessive localised or general expansion of the concrete or grout.

g) Notwithstanding the limits on chlorides as per SANS 1083 (BS 882), the acid soluble chloride as NaCl level in aggregate as a percentage by mass shall not exceed the limits given in the following table:

Table 9: Percentage Limits for Acid Soluble Cholride as NaCl

Concrete Type	Coarse Aggregate	Fine Aggregate
Reinforced with OPC	0.05%	0.10%
Reinforced with SRPC	0.02%	0.05%

Note: These limits shall be subject to the overall limit for the concrete as mixed.

h) The maximum nominal aggregate size for concrete batching shall be as follows:

1) Unreinforced concrete: 37.5/40 mm
2) Reinforced concrete excluding piles: 26.5/28 mm
3) Piles: 19/20 mm
4) Grout: 10 mm

4.5.4 Workability

a) Concrete mix designs and batching shall be conducted in a manner to achieve adequate workability, to ensure that the concrete will be dense, without voids or honeycombing.

b) The design mix workability of the concrete, as determined by the “Slump Test”, shall meet the following requirements by application:

		Target slump (Tolerance of 25mm)
1)	unreinforced concrete:	75 mm
2)	reinforced concrete for conventional foundations and pile caps:	75 mm
3)	reinforced concrete for cast in-situ piles:	125 mm
4)	reinforced concrete for cast in-situ inclined piles/anchors:	175 mm
5)	Pumped reinforced concrete for cast in-situ foundations,	200 mm

c) Adjusting of the slump on site shall only be done by adding the mix design admixture amount strictly to manufacturer’s instructions and mix proportions.

d) In instances where the slump values stated in clause 4.5.4 b (v) differ from those specified by the D**esign Engineer**, the **Design Engineers’** slump values will take precedence. This slump value will be subject to verification on site.

e) The consistency of grout mixtures shall be proportioned so that the mixture is pourable. The fine aggregate to cement ratio shall not exceed 3:1 irrespective of workability.

f) Any admixtures to the concrete proposed by the Contractor shall be subject to the **Design Engineer’s** acceptance.

4.5.5 Reinforcing Steel

a) All main reinforcing steel shall conform to SANS 920 Type C, Class 2, and Grade II hot rolled deformed bars with a minimum yield stress of 450MPa. The minimum bar size utilised shall be 10 mm.

ESKOM COPYRIGHT PROTECTED

When downloaded from the WEB, this document is uncontrolled and the responsibility rests with the user to ensure it is in line with the authorized version on the WEB.

b) All secondary reinforcing for stirrups, hoops and spirals, shall as a minimum conform to SANS 920 Type "A" hot rolled bars of plain cross-section of mild steel with a minimum yield stress of 250MPa.

c) At the Contractor's option or as required by design, Type B or Type C reinforcing steel may be utilised. The minimum bar sizes utilised shall be at least 0.25 times the largest main reinforcing bar, or 0.01 times the average of the cross-sectional dimensions of the concrete with a minimum diameter of 6 mm allowed. Water used for construction should comply with SANS 51008

4.6 Construction

The first installation of each foundation system (pad and pier, rock anchors, piles etc.) for each structure type (self-supporting, guyed-V and cross-rope) shall be witnessed by the **Design Engineer**.

Two hold points are required during the foundation construction before proceeding with the next construction phase.

First holding point; no construction may start without the approval of the foundation -soil nominations by the **Design Engineer.**

Second holding point; No concrete may be placed before the inspection of the excavation, reinforcing, stubs or link positions, have all been checked by the **Eskom Site Representative**.

The **Eskom Site Representative** shall take photos at the 2nd holding point before concrete placing and then during the backfilling. These photos shall be submitted on a regular basis to the **Eskom Project Manager** and the **Eskom Design Engineer.**

4.6.1 Excavation

a) At each tower or pole position, the **Contractor** shall excavate, construct the appropriate foundation and backfill the excavation as required. Excavation in this instance shall be the removal of soil/rock by any accepted means for the purpose of constructing a particular foundation system, including conventional pad and pier type foundations, spread footings, piles, anchors, etc.

b) No excavation work, other than for soil investigation, shall be commenced on a section of line until the following conditions have been met:

   1) The **Contractor** has submitted a schedule of tower leg ground levels and proposed leg extension lengths to the **Design Engineer**.

   2) The **Contractor** has submitted the proposed foundation and soil type nomination schedules to the **Design Engineer.**

   3) If drilled cast-in-situ piles or rock anchors are proposed, soil samples pile/anchor tests have been conducted, if so instructed by the **Design Engineer**.

   4) The excavated top soil shall be kept separate from the subsoil

c) Excavations shall be made to the full foundation dimensions required, and shall be finished to the prescribed lines and levels.

d) For type 1 and type 2 soils, the bottom or sides of excavations upon or against which concrete is to be poured shall be undisturbed. If, at any point in excavation, the natural material is disturbed or loosened

e) For type 3 and type 4 soils, a blinding layer of minimum 10MPa and 50mm thickness concrete, shall be applied to the base of the foundation.

f) Soil backfilling will not be accepted if the excavation is over- excavated for all soil and rock types. The **Contractor** is responsible for all additional expenses incurred with respect to over – excavation.

   1) Over – excavation not exceeding 300mm of the original foundation foot print and/or the founding depth (if extra length stubs are not available); shall be backfilled with minimum 10MPa concrete.

ESKOM COPYRIGHT PROTECTED

When downloaded from the WEB, this document is uncontrolled and the responsibility rests with the user to ensure it is in line with the authorized version on the WEB.

2) Over – excavation exceeding 300mm of the original foundation foot print and/or the founding depth (if extra length stubs are not available); reinforcement of same diameter must be extended to meet the acceptable cover (75mm (min) – 300mm (max)). The minimum splice length required is 45 times the diameter of the reinforcement.

g) When the material at foundation depth is found to be partly rock or incompressible material, and partly a soil or material that is compressible, all compressible material shall be removed for an additional depth of 200 mm and backfilled with 10MPa concrete "reimbursable as per to the bill of quantities".

h) The excavations shall be protected so as to maintain a clean subgrade until the foundation is placed. Any water, sand, mud, silt or other objectionable material which may accumulate in the excavation including the bottom of pile or anchor holes, shall be removed prior to concrete placement.

i) Excavations for cast-in-situ concrete, including pile caps cast against earth, shall be concreted within seventy-two hours after beginning the excavations. In addition to this general requirement, pile and/or anchor holes that are not adequately protected against the elements, must be corrected and be acceptable to the **Eskom Site Representative**. Soil excavations that remain un-concreted longer than seventy-two hours, shall be required to be enlarged by 150 mm in all sides/directions.

j) The excavations shall be kept covered or barricaded in a manner accepted by the **Eskom Site Representative** to prevent injury to people or livestock. Failure to maintain proper protection of excavations may result in the suspension of excavation work until proper protection measures have been restored.

k) The **Contractor** is to notify the **Eskom Site Representative** upon completion of the excavation for the foundations. No concrete is to be placed until the excavation; formwork and reinforcing steel have been inspected and accepted in writing by the **Eskom Site Representative**.

l) For Type 1 and Type 2 soils, DCP tests are required at the base of the foundation excavation to confirm bearing conditions. For Type 3 and Type 4 soils, DCP tests may be used at the excavation bases (if deemed required by supervising personnel or a registered professional).

4.6.2 Backfilling

a) After completion of foundation construction, the **Contractor** shall backfill each excavation with suitable material. **The Eskom Site Representative** shall accept the materials used for backfill, the amounts used and the manner of depositing and compaction of the materials.

b) The material to be utilised for compacted backfill shall be moistened to optimum moisture content (OMC) ±10%, and deposited in horizontal layers, having a thickness of not more than 300 mm before being compacted. In backfilling, the pad of the foundation shall be covered, first with a 200 mm layer of well-graded material containing no pieces larger than 20 mm, before any coarse material is deposited.

c) The backfill material to be compacted shall contain no stones more than 150 mm in diameter, and be free from organic material such as trees, brush, scraps, etc.

d) The distribution of material shall be such that the compacted material will be homogenous to secure the best practicable degree of compaction, impermeability and stability.

e) Prior to and during compaction operations, the backfill material shall have the optimum moisture content required for the purpose of compaction, impermeability and stability.

f) The material shall be mechanically compacted to a minimum of 90% of the dry density of the undisturbed material.

g) The surface of the backfill around the foundation shall be carried to such an elevation that water will not accumulate on top of the backfilled area.

ESKOM COPYRIGHT PROTECTED

When downloaded from the WEB, this document is uncontrolled and the responsibility rests with the user to ensure it is in line with the authorized version on the WEB.

h) Material removed from the excavation, which is either not suitable or not required for backfill, shall be spread evenly over or adjacent to the site, or be disposed of as directed by the **Eskom Site Representative**. Spreading of subsoil in agricultural areas will not be allowed. Excavated soil suitable for backfill will be returned to the excavation by backfilling with the subsoil first and the top soil last.

i) Where the excavated material is considered to be unsuitable for backfill, such as a material with high clay content or a sandy material with little variation in particle size, the **Contractor** shall propose a suitable method of soil improvement for consideration and acceptance by the **Eskom Design Engineer** prior to being implemented. The properties of the soil may be improved by the addition of stabilising agents such as Portland cement in the case of sandy soils and slaked lime in the case of clay soils. Backfill material stabilised in this way shall be mixed in the ratio of cement or lime: soil of 1:10. This material shall be properly mixed, moistened, placed and compacted in the same manner as other excavated material.

j) Where the material is found to be a matrix of boulders and soil, the removable boulders shall be removed “reimbursable as per to the “bill of quantities.” as also the extra-over for the imported backfill.

k) Backfilling operations are done after 7 days provide that the seven day concrete cube test results are available and accepted.

4.7 Concrete Foundations

4.7.1 Supply of Materials

The **Contractor** shall supply all concrete and concrete materials required for construction, including aggregates, cement, water, admixtures (if any), shuttering, reinforcing steel, all embedded steel components and materials for curing concrete.

4.7.2 Prior to concrete mix acceptance and placement

a) Well in advance of construction, the **Contractor** shall select the location of aggregate sources for concrete, and obtain representative samples of all aggregates. A representative sample shall consist of a blend of twelve separate samples from each aggregate stockpile. The representative samples shall be divided into two portions, one set of which shall be examined and accepted by the **Eskom Site Representative** and maintained on site during concreting operations. The second set which shall be delivered by the **Contractor** to a SANAS accredited concrete testing laboratory accepted by the **Design Engineer,** for examination of suitability of the aggregate in accordance with SANS 1083 and preparation of concrete trial mix design in accordance with the requirements of clause 4.7.6. Prior to any concrete placement the **Contractor** shall submit the trial mix designs and results of seven and twenty-eight day test cube strengths to the **Design Engineer** for acceptance.

b) **Contractor** shall obtain, from the ready-mix supplier, aggregate test reports and mix designs that satisfy the requirements of **clause 4.5** and test cube strength reports of all mix designs and submit it to the **Design Engineer** for acceptance prior to placement of any concrete. A ready-mix concrete supplier that does not have SANS 979 recognition shall only be used with the **Design Engineer’s** acceptance, and thereafter only after satisfying the above requirements.

4.7.3 Tolerances for concrete construction

The intent of this paragraph is to establish tolerances that are consistent with construction practice, and the effect that permissible deviations will have upon the structural action or operational function of the structure. Where tolerances are not stated for any individual structure or feature, permissible deviations will be interpreted in conformity with the provisions of this paragraph.

The **Contractor** shall be responsible for setting out and maintaining concrete excavations, shuttering and structural steelwork within the tolerance limits so as to ensure completed work within the specified tolerances. Concrete work, that exceeds the tolerance limits specified shall be remedied, or removed and replaced.

a) Variation in structure location

ESKOM COPYRIGHT PROTECTED

When downloaded from the WEB, this document is uncontrolled and the responsibility rests with the user to ensure it is in line with the authorized version on the WEB.

1) Transverse to centre-line: less than 50 mm

2) Longitudinal displacement: less than 300 mm

b) Variation in relative vertical elevation of structural steelwork (one leg to another)

1) Less than 5 mm

c) Variation in horizontal distance between structural steelwork from that computed

1) Adjacent legs: less than 5 mm

2) Diagonal legs: less than 7 mm

d) Rotation - maximum deviation of transverse axis of structure from bisector of interior line angle

1) Less than 0º 30’

e) Elevation - variation of tower base from centre-line peg

1) minus 150 mm

2) plus 350 mm

f) Height of concrete foundations above ground level

1) minimum. 250 mm (±50 mm)

2) maximum. – as per design

g) Variation in relative placement of foundation components from those indicated on drawings, including piles, shuttering, and structural steelwork

1) less than 50 mm

h) Tolerances for placing reinforcing steel

1) Variation of protective cover: 5 mm

2) Variation from indicated spacing: 25 mm

i) Tolerances for guy anchors

Guy anchors shall be installed such that the attachment point of the anchor is within 250 mm of the correct calculated position. The attachment point shall be a minimum of 350mm and a maximum of 750mm above the ground level.

Guy anchors designed for use with anchor rods extending below ground level shall have the anchor rod installed in line with the guy wire slope, within 1:20 (2.8 º) or such lesser tolerance as required by design

j) Tolerances for pole foundations

Pole foundations shall be constructed such that the pole, and the associated foundation works are within 50mm of the correct calculated position.

4.7.4 Workmanship

Concrete shall be proportioned, mixed, placed and finished in such a manner as to be free of honeycombing, segregation and other defects of workmanship.

4.7.5 Formwork

a) Formwork shall be of wood, metal or other suitable material.

b) The formwork shall be mortar-tight and shall be designed, constructed, braced and maintained such that the finished concrete will be true to the line and elevation, and will conform to the required dimensions and contours. It shall be designed to withstand the pressure of concrete, the effect of vibration as the concrete is being placed and all loads incidental to the construction operations without distortion or displacement.

ESKOM COPYRIGHT PROTECTED

When downloaded from the WEB, this document is uncontrolled and the responsibility rests with the user to ensure it is in line with the authorized version on the WEB.

c) Where the bottom of the formwork is inaccessible, provision shall be made for cleaning out extraneous material immediately before placing the concrete.

d) All exposed corners of the concrete shall be chamfered approximately 20 mm. A suitable nosing tool may be used for horizontal chamfers only if approved by the **Eskom Site Representative**. All formwork dimensions shall be checked, and if necessary, corrected before any concrete is placed.

e) All formwork shall be treated with a formwork-release agent accepted by the **Eskom Site Representative** before concrete is placed. Any release agent, which will adhere to, discolour or be deleterious to the concrete, shall not be used.

4.7.6 Concrete and Grout Mixing and Testing

The concrete mix shall consist of ordinary Portland cement, fine aggregate, coarse aggregate and water proportioned in accordance with the mix design accepted by **Design Engineer.** Adjustments in these proportions may be directed at any time when found necessary as a result of field tests of the concrete. No change in mix proportions shall be made unless instructed by the **Eskom Design Engineer**. As an alternative to the use of ordinary Portland cement, the **Eskom Design Engineer** may consider the use of other approved types of cement or blends thereof.

All testing must be conducted in a SANAS accredited laboratory or remote testing facility (if established on site); the remote testing facility must meet the technical specifications and health and safety requirements of the Employer.

a) No change in the source, character or grading of materials shall be made without written notice to the **Eskom Site Representative** and without a revised mix design being prepared and accepted by the **Eskom Design Engineer** prior to use of these materials.

b) During the concrete operations, the concrete mixture shall be tested for each batch by the Contractor to determine the slump of the fresh concrete in accordance with SANS Method 5862. Records of slump tests shall be supplied to the **Eskom Site Representative** on a daily basis.

c) Test cubes shall be prepared, in accordance with SANS Method 5863 at the initiation of the concrete placement of each truck/batch for the first three batches and twice every day that concrete is batched thereafter or for every 20 cubic meters where this amount is exceeded. Test cubes shall only be made out of a concrete batch at the point of discharge in actual use. Unless a concession is granted by the **Employer**, the **Contractor** shall install suitable on-site laboratory facilities for the storage and crushing of test cubes. The crushing equipment shall be appropriately calibrated (complying with SANS 5863) and accompanied by up-to date certification available for inspection at all times. The **Eskom Site Representative** shall witness all cube crushing tests.

   1) A test set comprises of a minimum of six cubes.

   2) Three to be crushed at seven days and three to be crushed at twenty eight days. The written results of the test cube strength tests shall be immediately forwarded to the Supervisor upon receipt.

   3) Additional test cubes shall be prepared and crushed as directed by the **Eskom Site Representative** where the concrete strengths are in question.

d) Grout cubes shall be taken for every tower with grouted anchor foundations and the cubes shall be tested to the same procedures as with the concrete cubes.

e) All cement shall be batched by mass. Cement shall be weighed to within 2% accuracy.

f) Aggregates may be batched by mass or by volume, provided that volumetric batching equipment is calibrated at the start of concrete operations by weighing a typical discharge. The quantities of aggregate batched shall be volume batched within 2% accuracy. Adjustments of fine aggregate volumes due to "bulking" shall be accounted for in batching as per SANS 10100-2.

g) The amount of moisture in the aggregates shall be determined on a daily basis by a method accepted by the **Eskom Site Representative,** and the water requirements as per the mix design altered accordingly.

ESKOM COPYRIGHT PROTECTED

When downloaded from the WEB, this document is uncontrolled and the responsibility rests with the user to ensure it is in line with the authorized version on the WEB.

h) Water quantities, including aggregate moisture allowances, shall be determined within 2% accuracy. The use of water meters for dispensing water shall be subject to the **Eskom Site Representative's** acceptance.

4.7.7 Mixing of Concrete

a) Concrete shall be mixed sufficiently to ensure that the various sizes of aggregate are uniformly distributed throughout the mass, and each aggregate particle is adequately coated with cement paste of uniform consistency. Concrete delivered to site that lacks homogeneity should be mixed for a longer time or discarded, as directed by the **Eskom Site Representative**.

b) For mixers of one cubic metre or less, the mixing time shall not be less than ninety seconds after all ingredients have been discharged into the mixer. For mixers of larger capacities, minimum mixing times shall be increased by fifteen seconds for each additional half cubic metre of mixer capacity, or fraction thereof.

c) Concrete delivered to the job site shall be mixed en-route. Mixing shall be rigorously controlled for agitating time, mixing time and overall time upon arrival at the foundation construction site. Concrete discharge shall be completed within one and one-half hours after introduction of the water to the cement and aggregate.

d) The concrete supplier may only add water and/or admixtures to the concrete on site when permitted to do so by the batching plant. Such instructions must be shown on the delivery note. At no time shall the cement / water ratio be less than 1.8.

e) Non-shrink grout shall be mixed in a suitable mechanical grout mixer/pump accepted by the **Eskom Site Representative**.

4.7.8 Placement of Reinforcing Steel

a) The **Contractor** shall install all the reinforcing steel required for foundations. Reinforcing steel shall be fabricated and bent in strict accordance with the drawings and SANS 282.

b) Reinforcing steel, before being positioned, shall be thoroughly cleaned of mill scale and any coatings that will destroy or reduce bond. Reinforcing steel shall be accurately positioned and secured against displacement during placing and vibrating of concrete. Reinforcing bars shall be tied at all intersections with no less than No.18 gauge annealed wire. Reinforcing bars shall be overlapped forty-five diameters at all splices, unless shown otherwise on the drawings. Reinforcing bars shall be provided and placed as detailed on the foundation drawings. Unless otherwise shown on the drawings, the minimum cover to the main reinforcing bars in a pile, a pile cap, or chimney shall be 50 mm and 75 mm for the sides, and bottom of the slab or anchor. Use of suitable accepted spacers or supports shall be made, to ensure that the minimum concrete cover to the reinforcement is maintained during the placement of concrete. Where cover blocks are used to support the lower layers of reinforcing, these shall be at least 75 mm thick to make allowance for the uneven ground surface on which the reinforcing cage rests. Where concrete cover blocks are used, they shall be made of minimum 25MPa concrete.

4.7.9 Placement of Embedded Items

a) The **Contractor** shall install all required embedded items shown on the drawings, prior to placing (pouring) of concrete. Structural steelwork or holding down bolts shall be accurately positioned and securely held in place during the placement (pouring) of concrete. The minimum cover to all embedded items, but excluding angle stubs, shall be 150 mm. The minimum cover to angle stubs and cleats shall be 75 mm unless otherwise shown on the drawings.

ESKOM COPYRIGHT PROTECTED

When downloaded from the WEB, this document is uncontrolled and the responsibility rests with the user to ensure it is in line with the authorized version on the WEB.

b) Angle stubs may be supported on the bottom of excavations by either precast concrete slabs set at the correct level by placing suitable grout or concrete underneath it, or on a previously placed blinding layer of 10MPa concrete installed up to the correct level. The precast slab shall be square in plan with a side dimension of 300 mm, and a depth of 75 mm, and shall be constructed using reinforced concrete with a minimum characteristic strength of 25MPa. The placing of loose rubble, stones, bricks, etc. under the precast slab will not be acceptable.

c) Structural steelwork or anchor bolts shall be embedded such that the top of the concrete of the foundation correctly coincides with the designed level.

d) Earthing requirements are to be as per the latest revision of standard 240-130615862: Earthing of Transmission Line Towers and the instructions provided in **Annex C**.

e) Notwithstanding the above mentioned standard, if additional earthing buried in soil is to be applied in order to achieve the required tower footing resistance, the material used, must be copper clad steel with a service lifespan in excess of 50 years and with a low scrap value.

4.7.10 Placement of Concrete

a) No concrete for foundations shall be placed (poured) until each foundation has been inspected and accepted by the **Eskom Site Representative.** The foundation at the time of this inspection shall be ready for concrete placement (pouring) including reinforcing steel, embedded items and any necessary formwork.

b) All surfaces of the foundation upon or against which concrete is to be placed shall be free from mud and/or loose or disturbed material. A blinding layer of 10MPa between 50 mm to 100 mm is to be installed on all bottom surfaces of type 3 and type 4 foundations and where warranted, and approved by the Eskom Site Representative.

c) The surfaces of dry absorptive materials, against which concrete is to be placed, shall be moistened prior to the placing of concrete to prevent excessive moisture being withdrawn from the fresh concrete.

d) At least two suitable concrete poker vibrators shall be ready for operation at the site prior to placement of concrete.

e) Freshly mixed concrete shall be handled, transported and deposited in such a manner as to prevent segregation or loss of material. When discharging concrete by chute, the slope of the chute shall be uniform throughout its length and shall not be flatter than 1 in 3 or steeper than 1 in 2. Baffles shall be provided at the end of the chute to ensure a vertical discharge of the concrete into the foundation. The maximum free discharge height shall be three metres, and for heights in excess of this, a tremie pipe shall be used.

f) Placement (pouring) of concrete shall not commence when the air temperature is below 5°C. Where temperatures can falls to 00 C during the next 24 hours, insulating covering must be placed on the concrete surfaces for at least 2 days to cover and insulate the concrete from the cold.

g) During hot weather concreting operations, the **Contractor** shall take and record of the air temperature of each batch casting. The temperature of the air immediately before placement (pouring) shall not exceed 32°C.

Where the air temperature exceeds 32°C but is still below 42°C the following measures shall be executed over and above normal curing: For pads insulating sheeting (such as DPC plastic) must be over lain on the freshly casted concrete and applied curing compound with a 50mm layer of sand on top of it. For columns the formwork must be kept on for 3 days and wetted at least 3 times during the first two days.

Where the air temperature exceeds 42°C but is still below 50°C the following measures shall be executed over and above normal curing: For pads insulating sheeting (such as DPC plastic) must be over lain on the freshly casted concrete and applied curing compound with a 50mm layer of sand on top of it. For columns the formwork must be kept on for 4 days and wetted at least 5 times during the first three days.

ESKOM COPYRIGHT PROTECTED

When downloaded from the WEB, this document is uncontrolled and the responsibility rests with the user to ensure it is in line with the authorized version on the WEB.

Where the temperature exceeds 50°C the concrete shall be discarded.

h) No concrete shall be placed which has taken its initial set, regardless of whether the specified one and one-half hour period has elapsed or not. If a setting retarder, accepted by the **Eskom Design Engineer**, has been used, the one and one-half hour period may be exceeded provided the concrete has not taken its initial set. The **Contractor** shall dispose of waste concrete in a place acceptable to the **Eskom Site Representative**.

i) Concrete shall be placed under water, with a suitable watertight tremie, accepted by the **Eskom Site Representative**, of sufficient length to reach the bottom of the excavation. The tremie shall be free of water when filled with concrete to the bottom of the excavation. The tremie shall be kept full of concrete during the entire concrete placing operation. The discharge end of the tremie shall not be lifted out of the freshly placed mass of concrete until the concrete placement has been completed.

j) Concrete shall be thoroughly settled and compacted into a dense homogeneous mass throughout the whole depth of each layer being consolidated, using internal vibrators. Excessive vibration, causing segregation, is to be avoided. Concrete vibrator penetrations shall be at ± 400 mm spacing and shall not be used to move concrete.

k) The concrete in cast-in-situ piles shall be vibrated from the bottom upwards.

l) Unless authorised by the **Eskom Site Representative,** the **Contractor** shall not place concrete, unless the **Eskom Site Representative** is present during the entire placement operation.

m) When alternative foundations consisting of multiple cast-in-situ piles and pile caps are utilised, the **Contractor** shall at approximately one tower in twenty, open up on two sides of the completed foundation of one leg, the pile cap and top 500 mm of the piles, if so instructed by the **Eskom Site Representative.** If the foundation is rejected for any reason, the **Contractor** shall open up as many additional foundations as determined by the **Eskom Site Representative** who will refer it to the **Eskom Design Engineer,** as is necessary to fully assess the problem. Foundations accepted are to be backfilled using 10MPa concrete up to a level at least 150 mm above the base of the pile cap.

n) Concrete in all drilled foundations utilising piles, shall be inspected immediately prior to concrete placement using a suitable high powered torch and measuring tape. The inspection is required to determine:

1) That no soil has fallen into the drilled hole such that either the design length or the design diameter of the pile has been affected, and

2) That no material from the hole sides has become dislodged and has fallen against reinforcing. No concrete will be allowed to fall directly against the hole sides during placement. A poker vibrator shall be placed in the bottom of the pile hole prior to any concrete placement and gradually lifted with the concrete pour. With inclined piles the concrete is to be placed by means of a tremie pipe which extends down the full length of the pile. The tremie pipe, together with the poker vibrator can then be gradually lifted together with the pour.

4.7.11 Construction Joints

a) In general, foundations shall be constructed monolithically. Construction joints are to be avoided as far as possible. If construction joints cannot be avoided and are accepted by the **Eskom Site Representative**, the **Contractor** may be permitted to make a construction joint if the following criteria are met:

1) The concrete is reinforced and the reinforcing steel will develop full bond strength both sides of the construction joint. No construction joints will be allowed in unreinforced concrete.

2) In multiple cast-in-situ piles, the construction joint is to be 75 mm, and in rock anchors 100 mm, above either the base of the pile cap excavation or the top of blinding level. If the piles are constructed after the excavation for the pile cap has taken place, suitable ring shutters of the same diameter of the piles shall be used to construct the above mentioned pile/anchor projections.

ESKOM COPYRIGHT PROTECTED

When downloaded from the WEB, this document is uncontrolled and the responsibility rests with the user to ensure it is in line with the authorized version on the WEB.

b) No construction joints will be allowed in piles, pile caps, deadman anchors and pad slabs of pad and pier foundations.

c) At all construction joints, the surfaces of the previously placed and hardened concrete shall be thoroughly cleaned of all foreign matter, and primed with a 15 mm thick layer of a wet mix of cement and sand in equal proportions, in the presence of the **Eskom Site Representative** before new concrete is placed. The grout coating shall be brushed over the concrete surface to ensure thorough coverage, particularly between the reinforcing bars. The new concrete shall be placed before the grout coating has taken its initial set.

4.7.12 Concrete Surface Finish

a) The top surface of the foundation shall be at least a wood float finish, and shall be contoured to shed water.

b) All concrete placed against shuttering shall be free from irregularities, fins, rock pockets or other imperfections. Any rock/aggregate pockets, porous or defective concrete shall be removed to the extent instructed by the **Eskom Site Representative** and repaired by filling these voids with specialized concrete, cement mortar of a higher strength, as accepted by the **Eskom Design Engineer.**

c) All exposed concrete sections shall be shuttered to a minimum of 250 mm below ground level.

4.7.13 Concrete Curing

a) The **Contractor** shall provide means of maintaining concrete in a moist condition (for curing) for at least seven days after the placement of concrete.

b) At the **Contractor's** option, concrete may be cured either by retaining shuttering in place and applying a liquid curing compound which forms a moisture retaining membrane on un-shuttered concrete surface, or by removing shuttering and applying a curing compound as described to all exposed concrete surfaces. Curing compounds utilised shall be of a type accepted by the **Design Engineer**. Notwithstanding these requirements, formwork shall not be removed until at least 36 hours after the final placement of the concrete against such formwork. The **Contractor** shall remove formwork in such a way that shock forces and damage to the concrete are avoided.

4.7.14 Concrete Cracks Repair

For crack widths:

a) All cracks less than 2mm wide and less than 30mm deep must be repaired with Eskom approved compounds.

b) For all larger cracks than specified in (a) above, a non-conformance must be raised and consultation with the **Eskom Design Engineer** must commence.

4.7.15 Steelwork

a) All galvanised structural steel at the steel/concrete interface shall be painted with an Eskom approved protective bituminous paint. This protection shall extend 500 mm above and 500 mm below the top surface level of the protruding foundation blocks. A final second coat shall be painted after construction on the 500 mm part above the concrete and overlapping onto the concrete for ±100 mm to seal the interface.

b) All embedded steel (i.e. Link plates and stubs) below ground line shall be galvanised and encased in concrete. All link plates shall be encased in concrete using a minimum permanent shutter (i.e. HDPE pipe) of 250 mm diameter minimum with at least 50 mm concrete cover. No structural steel shall be buried or come directly in contact with the soil.

ESKOM COPYRIGHT PROTECTED

When downloaded from the WEB, this document is uncontrolled and the responsibility rests with the user to ensure it is in line with the authorized version on the WEB.

4.8 Anchor Block (deadman), Pile and Rock Anchor Resting

4.8.1 Design Load (Ultimate Load) Anchor Test Requirements

a) General and test set up requirements

1) Where requested by the **Design Engineer**, the **Project Manager** shall, instruct the **Contractor** to install in each general soil type encountered and at any additional locations, a test cast-in-situ anchor for the purpose of verifying the ultimate anchor capacity and concrete/soil frictional resistance values.

2) The **Contractor** shall provide the equipment capable of loading the anchor and personnel to perform the test.

3) **Contractor** shall prepare the test procedure for the testing of deadman anchor, pile or rock anchor for the load equal to the design load (ultimate load). The test procedure, based on the applicable test requirements, shall be submitted to the Design Engineer for acceptance prior to execution of the test.

4) The design load test anchor, pile or rock anchor shall not form part of a final tower anchors/foundation.

5) Tests shall be conducted in the presence of the **Eskom Site Representative**.

6) Anchor, pile or rock anchor foundations installed prior to acceptance by the **Design Engineer** of the test results, will be subject to modification or replacement by the **Contractor** should the anchor, pile or rock anchor fail the test.

7) The test beam supports shall be placed outside the uplift influence zone of the anchor, pile or rock anchor to be tested and the distance on either side of the anchor, pile or rock anchor to the test beam supports shall not be less than "r".

   $r = (l + c) \tan Ø$ where:

   l = depth of pile/anchor (or anchor group)

   c = depth of pile/anchor cap excavation

   Ø = frustum angle

8) Two dial gauge micro meters shall be placed on either side of the pulling rod, in order to eliminate errors due to rotation of the anchor, pile or rock anchor. The datum frame supports shall also be positioned a similar distance “r” from the test pile/anchor as the test beam supports above. The average reading of these gauges will represent the actual creep. Should this method, for any authentic reason prove impracticable, then a suitable approved alternative method may be used.

4.8.2 Block Guy Anchor (Deadman) Design Load Testing Criteria

The design load shall be applied to the block anchor during the test in appropriate increments to 60%, 85% and 100%, each for a minimum holding period of 5 minutes and finally, 100% for at least half an hour. Successive load increments shall not be applied and the maximum test load shall be held until the rate of movement under the acting load has stabilised at a rate of movement not exceeding 3.75 mm in 5 minutes. The maximum test load shall also be held until the rate of movement under the applied load has stabilised at a rate of movement not exceeding 3.75 mm in 5 minutes. The anchor will be considered to have passed provided the total movement does not exceed 50 mm during the entire test period. The residual anchor movement, once all load has been removed, shall be recorded at the end of the test.

ESKOM COPYRIGHT PROTECTED

When downloaded from the WEB, this document is uncontrolled and the responsibility rests with the user to ensure it is in line with the authorized version on the WEB.

4.8.3 Pile Design Load Testing Criteria

The design load shall be applied to the pile during the test in appropriate increments to 60%, 85% and 100%, each for a minimum holding period of 5 minutes and finally, 100% for at least half an hour. Successive load increments shall not be applied and the maximum test load shall be held until the rate of movement under the acting load has stabilised at a rate of movement not exceeding 0.75 mm in 5 minutes. The maximum test load shall also be held until the rate of movement under the applied load has stabilised at a rate of movement not exceeding 0.75 mm in 5 minutes. The pile will be considered to have passed provided the total movement does not exceed 7 mm during the entire test period. The residual pile movement, once all load has been removed, shall be recorded at the end of the test. Refer to Table 10 below.

4.8.4 Rock Anchor Design Load Testing Criteria

The design load shall be applied to the anchor during the test in appropriate increments to 50%, 75%, 90% and 100%, each for a minimum holding period of 5 minutes and finally, 100% for at least half an hour. Successive load increments shall not be applied and the maximum test load shall be held until the rate of movement under the acting load has stabilised at a rate of movement not exceeding 0.25 mm in 5 minutes. The maximum test load shall also be held until the rate of movement under the applied load has stabilised at a rate of movement not exceeding 0.25 mm in 5 minutes. The anchor will be considered to have passed provided the total movement does not exceed 2.5 mm during the entire test period. The residual rock anchor movement, once all load has been removed, shall be recorded at the end of the test.

ESKOM COPYRIGHT PROTECTED

When downloaded from the WEB, this document is uncontrolled and the responsibility rests with the user to ensure it is in line with the authorized version on the WEB.

Table 10: Foundation Test Criteria

FOUNDATION TEST CRITERIA - Design load				
DESIGN LOAD TEST	Load	holding period	movement	Rate of movement
BLOCK ANCHOR (Deadman)- Soil Type 1-2				
DESIGN LOAD TEST	%	minutes	mm	mm/minute
	50	5	3.75	0.75
	75	5	3.75	0.75
	90	5	3.75	0.75
	100	30	22.5	0.75
	Holding+ movement total		34	
	Total Final Allowable movement		**50mm**	
PILE ANCHOR - FULL LOAD- Soil Type 1-2				
DESIGN LOAD TEST	Load	holding period	movement	Rate of movement
	%	minutes	mm	mm/minute
	50	5	0.75	0.15
	75	5	0.75	0.15
	90	5	0.75	0.15
	100	30	4.5	0.15
	Holding+ movement total		6.8	
	Total Final movement		**7mm**	
ROCK ANCHOR - Soft and Hard Rock				
DESIGN LOAD TEST	Load	holding period	movement	Rate of movement
	%	minutes	mm	mm/minute
	50	5	0.25	0.05
	75	5	0.25	0.05
	90	5	0.25	0.05
	100	30	1.5	0.05
	Holding+ movement total		2.3	
	Total Final movement		**2.5mm**	

ESKOM COPYRIGHT PROTECTED

When downloaded from the WEB, this document is uncontrolled and the responsibility rests with the user to ensure it is in line with the authorized version on the WEB.

4.8.5 Pressure Grout Injected Anchors – Test Criteria

For an anchor in soils 1-3; the design load shall be applied to the anchor during the test in appropriate increments to 50%, 75%, 90% and 100%, each for a minimum holding period of 5 minutes and finally, 100% for at least half an hour. Successive load increments shall not be applied and the maximum test load shall be held until the rate of movement under the acting load has stabilised at a rate of movement not exceeding 1 mm in 5 minutes. The maximum test load shall also be held until the rate of movement under the applied load has stabilised at a rate of movement not exceeding 1 mm in 5 minutes. The anchor will be considered to have passed provided the total movement does not exceed 10 mm during the entire test period. The residual rock anchor movement, once all load has been removed, shall be recorded at the end of the test.

For an anchor in rock; the design load shall be applied to the anchor during the test in appropriate increments to 50%, 75%, 90% and 100%, each for a minimum holding period of 5 minutes and finally, 100% for at least half an hour. Successive load increments shall not be applied and the maximum test load shall be held until the rate of movement under the acting load has stabilised at a rate of movement not exceeding 0.25 mm in 5 minutes. The maximum test load shall also be held until the rate of movement under the applied load has stabilised at a rate of movement not exceeding 0.25 mm in 5 minutes. The anchor will be considered to have passed provided the total movement does not exceed 3 mm during the entire test period. The residual rock anchor movement, once all load has been removed, shall be recorded at the end of the test.

Refer to Table 11 and Table 12 below.

ESKOM COPYRIGHT PROTECTED

When downloaded from the WEB, this document is uncontrolled and the responsibility rests with the user to ensure it is in line with the authorized version on the WEB.

Table 11: Pressure Grout Injected Anchors Test Criteria: Soil Types 1 - 3

PRESSURE GROUT INJECTED ANCHORS - TEST CRITERIA				
FULL LOAD TEST	Load	holding period	movement	Rate of movement
SINGLE ANCHOR - Soil Type 1 -3				
FULL LOAD TEST	%	minutes	mm	mm/minute
	50	5	1	0.2
	75	5	1	0.2
	90	5	1	0.2
	100	30	6	0.2
	Holding+ movement total		9	
Total Final Allowable movement			10mm	

Table 12: Pressure Grout Injected Anchors Test Criteria: Soft/Hard Rock

SINGLE ANCHOR - Soft /Hard Rock				
FULL LOAD TEST	Load	holding period	movement	Rate of movement
	%	minutes	mm	mm/minute
	50	5	0.25	0.05
	75	5	0.25	0.05
	90	5	0.25	0.05
	100	30	1.5	0.05
	Holding+ movement total		2.3	
Total Final Allowable movement			3mm	

4.8.6 Proof Load Anchor/Pile Test Requirements

General and test set up requirements

a) To ensure quality assurance, anchor strength and construction integrity, the contractor shall execute proof load tests on a minimum of 5% of the anchors installed.

ESKOM COPYRIGHT PROTECTED

When downloaded from the WEB, this document is uncontrolled and the responsibility rests with the user to ensure it is in line with the authorized version on the WEB.

The **Contractor** must request a list of tower foundations to be tested from the **Eskom Site Representativ**e or **Design Engineer**. The **Contractor** shall apply a construction proof load test equal to 70% of the ultimate loading conditions to the completed anchor for the purpose of verifying the maximum working load capacity of the anchor.

b) The **Contractor** shall prepare the test procedure and supply all equipment and personnel to perform the tests. The pile/anchor test procedure, based on the following requirements, shall be prepared by the **Contractor** and submitted to the **Design Engineer** for acceptance prior to the execution of the tests.

c) The **Design Engineer** may request that the pile/anchor foundation be tested, as a whole.

d) Pile/Anchor proof load tests shall be conducted in the presence of the **Eskom Site Representative**.

e) Pile/Anchor foundations installed prior to acceptance by the **Design Engineer** of the pile/anchor test results will be subject to modification or replacement by the **Contractor** should the pile/anchor fail the test.

f) The test beam supports shall be placed outside the uplift influence zone of the pile/anchor to be tested and the distance from the outside of the pile/anchor (or pile/anchor group) to the test beam support shall not be less than "r".

$r = (l + c) \tan Ø$ where:

l = depth of pile/anchor (or pile/anchor group) with respect to the underside of the pile/anchor cap.

c = depth of pile/anchor cap excavation and Ø = frustum angle.

g) Two dial gauge micro meters shall be placed on either side of the pulling rod, in order to eliminate errors due to rotation of the test pile/anchor. The datum frame supports shall also be positioned a similar distance from the test pile/anchor as the test beam supports above. The average reading of these gauges will represent the actual creep. Should this method, for any authentic reason prove impracticable, then a suitable approved alternative method may be used.

h) The load shall be applied to the anchor in appropriate increments to 50%, 75%, 90% and 100% of the proof test load, and then unloaded to 50% and again loaded to 100% of the proof test load, twice, i.e. during two further cycles of loading. The Contractor shall monitor anchor/pile movement along the guy slope or vertical slope in the case of vertical pile/anchors. Successive load increments shall not be applied until the rate of creep is less than or equal to the measurements listed below:

1) Block guy anchors (deadman) = 2.5 mm/minute

2) Pile anchors = 0.1 mm/minute

3) Rock anchors = 0.05 mm/minute.

i) The three cycles of loading from 50% to 100% shall each be of duration of not less than 5 minutes.

1) A guy anchors shall be considered acceptable if the total creep from 50% to 100% load over 3 cycles is less than 15 mm.

2) A pile anchor shall be considered acceptable if the total creep from 50% to 100% load over 3 cycles is less than3 mm.

3) A rock anchor shall be considered acceptable if the total creep from 50% to 100% load over 3 cycles is less than 1 mm.

j) If the creep exceeds above criteria the anchor /pile foundation shall be modified or replaced by the Contractor and re-tested.

k) Refer to Table 13 below.

ESKOM COPYRIGHT PROTECTED

When downloaded from the WEB, this document is uncontrolled and the responsibility rests with the user to ensure it is in line with the authorized version on the WEB.

Table 13: Proof Loads

PROOF LOADS				
PROOF LOAD TEST	Load	holding period	movement	Rate of movement
BLOCK ANCHOR (Deadman)- PROOF LOAD				
PROOF LOAD TEST	%	minutes	mm	mm/minute
	50- 100	5	3.75	0.75
	50- 100	5	3.75	0.75
	50- 100	5	3.75	0.75
	Holding+ movement total		11.3	
Total Final Allowable movement			**15mm**	
PILE ANCHOR - PROOF LOAD				
PROOF LOAD TEST	Load	holding period	movement	Rate of movement
	%	minutes	mm	mm/minute
	50- 100	5	0.75	0.15
	50- 100	5	0.75	0.15
	50- 100	5	0.75	0.15
	Holding+ movement total		2.3	
Total Final movement			**3mm**	
ROCK ANCHOR - PROOF LOAD				
PROOF LOAD TEST	Load	holding period	movement	Rate of movement
	%	minutes	mm	mm/minute
	50- 100	5	0.25	0.05
	50- 100	5	0.25	0.05
	50- 100	5	0.25	0.05
	Holding+ movement total		0.8	
Total Final movement			**1mm**	

l) Figure 4 below illustrates the displacement with the addition of load.

ESKOM COPYRIGHT PROTECTED

When downloaded from the WEB, this document is uncontrolled and the responsibility rests with the user to ensure it is in line with the authorized version on the WEB.

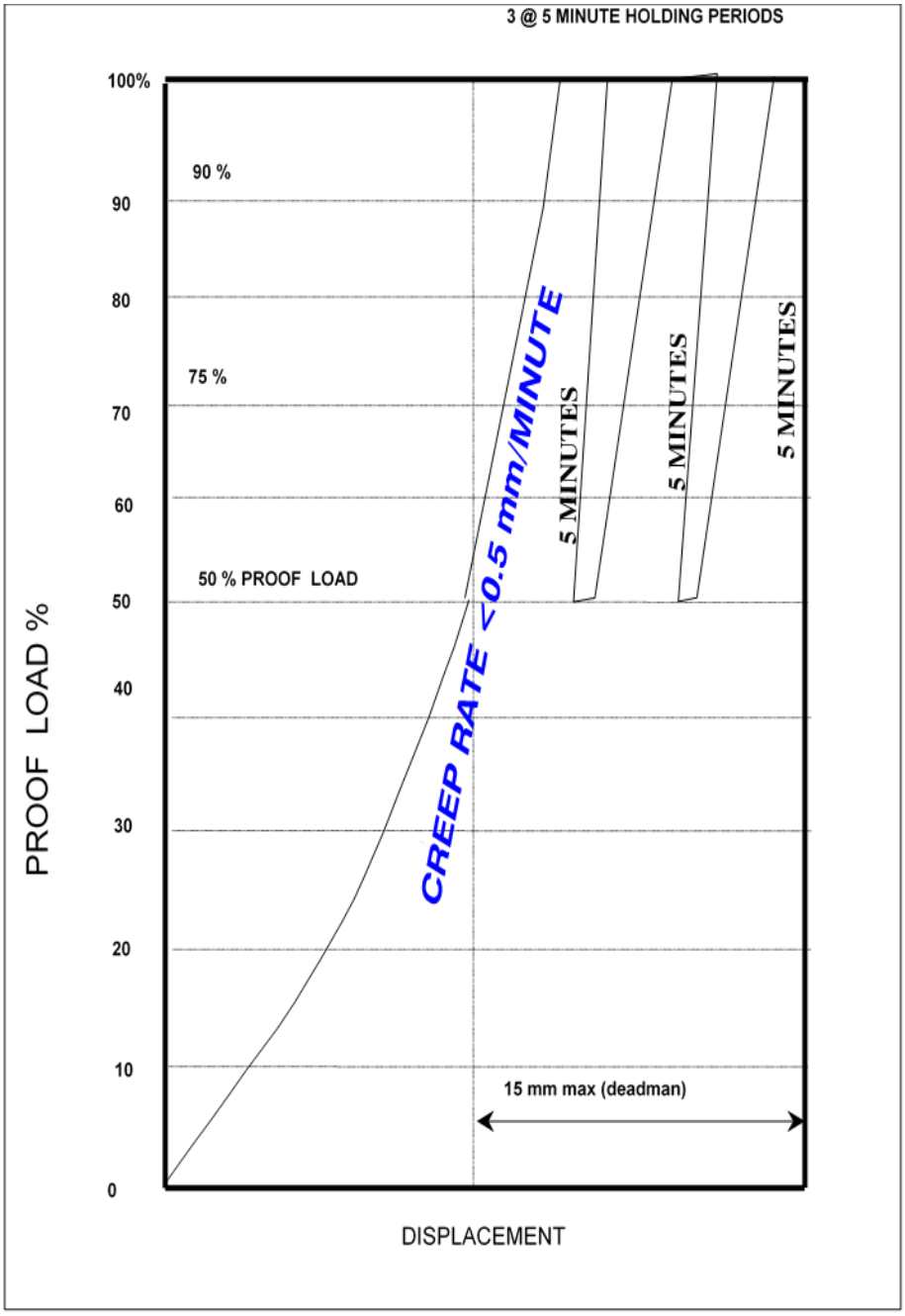

Proof load = 70% Ultimate foundation loading

Figure 4: Proof Load Percentage versus Displacement

4.8.7 Pole Foundations

a) The **Contractor** shall provide equipment on site during the construction of the pole foundation capable of loading the pole foundation to two-thirds of the maximum design moment.

b) Where instructed by the **Eskom Site Representative**, the **Contractor** shall apply a construction proof load test of two-thirds the maximum design moment to the completed pole.

ESKOM COPYRIGHT PROTECTED

When downloaded from the WEB, this document is uncontrolled and the responsibility rests with the user to ensure it is in line with the authorized version on the WEB.

c) The pole foundation shall be loaded in increments of 50%, 75%, 90% and 100% and then unloaded to 50% in 3 cycles of 50% to 100% of the proof test. If creep exceeds 1 mm/minute at ground level, additional load shall be applied until the creep is less than the stated limit. The three 50% loads and three 100% loads shall each be maintained on the pole for 5 minutes. If the creep is less than 1 mm/minute, the final creep measurements shall be taken after each holding period. The pole foundation shall be considered acceptable if the total ground level creep from 50% to 100% load over 3 cycles is less than 30 mm. If the creep exceeds 30 mm, the foundation shall be modified or replaced by the **Contractor** and re-tested.

d) All pole foundation tests shall be conducted in the presence of the **Eskom Site Representative.**

4.9 Access and Ground Erosion protection for overhead line construction

Refer to Annex F.

5. Towers

5.1 Tower Design

5.1.1 By the Employer

a) If the **Employer** provides tower drawings, it shall remain the responsibility of the **Contractor** to verify such drawings are to his satisfaction. Although the **Employer** took all necessary measures to confirm the accuracy and completeness of all tower drawings, it remains the responsibility of the **Contractor** to report any inadequacies.

b) Changes in tower configurations shall be reviewed and accepted by the **Employer** prior to manufacture to ensure acceptability of any changed configuration.

5.1.2 By the Contractor

a) If the **Employer** requires the **Contractor** to develop new towers, a separate project specific tower development specification shall be prepared by the **Employer.**

b) If the **Contractor** prefers to use his own design of towers, other than those specified by the **Employer**, these alternative tower designs shall be submitted to the employer for acceptance at tender stage, including outline drawings, test reports, manufacturing drawings, clearance diagrams. The **Contractor** shall be fully responsible for his designs and their satisfactory performance in service. Acceptance by employer does not relieve the contractor of responsibility for the adequacy of the design, dimensions and details.

c) Where the **Employer** provides general tower configurations, they act as a guide only to the **Contractor**. Electrical clearances, cover angles, minimum phase spacing, tower heights etc, shall be as shown on the conceptual drawing. The **Contractor** is encouraged to improve the tower in respect of mass and aesthetics.

d) Tower shall be designed to withstand all specified loads, and shall be capable of withstanding construction loads during tower erection without special handling

5.2 Tower Manufacturing

5.2.1 Tower Code Numbers and Marking

a) New and existing tower designs accepted for manufacture will be allocated a tower code number consisting of three digits, e.g. 422. This number is to be used in conjunction with the tower type letters and tower descriptions given in the schedules to form the titles of the various towers.

For example:

Suspension tower type 422 A

ESKOM COPYRIGHT PROTECTED

When downloaded from the WEB, this document is uncontrolled and the responsibility rests with the user to ensure it is in line with the authorized version on the WEB.

0° - 15 ° Angle strain tower type 422 B

These titles are to be used on all correspondence, drawings, test reports, etc., relating to a particular tower.

b) Each tower member shall be allocated an identifying number, which shall correspond, to the number on the appropriate tower erection and manufacturing drawing.

c) The tower code number and the tower type letter are to be clearly stamped on every member of the tower as a prefix to the member mark number. All steelwork shall carry a manufacturer's identification marking consisting of a maximum of three letters. This shall be of the same letter height as the number code. Acceptance of the marking shall be obtained prior to usage. These marks shall be stamped before hot dip galvanizing and be clearly readable after hot dip galvanizing and erection, e.g.: on back to back members these markings shall be on the flange without stitches.

d) Marking shall be done by stamping the marks into the metal with numerals or letters of 10mm minimum height. The marking shall be consistently in the same relative location near the ends on all pieces. No other marking shall be used.

e) See also the requirements in 5.2.9 “Anti-theft measures and marking”

5.2.2 Tower Steel Standard

a) Structural steel for all tower members, including all stubs and cleats embedded in concrete shall conform to SANS 50025 Grade S355JR, and shall be hot dip galvanised after fabrication and marking.

b) Certified mill test reports of the chemical and mechanical properties of the steel for the full quantity required for fabrication shall be obtained from the steel supplier. Copies of these mill test reports shall be retained at the **Contractor's** works for review.

c) The **Contractor** shall, if so instructed, cut samples from deliveries of Grade S355JR steel and conduct mechanical tests upon the samples to ensure that the steel is Grade S355JR. The frequency of testing shall be subject to acceptance by the **Design Engineer**.

d) Only structural shapes included in the latest edition of the "South African Steel Construction Handbook", published by the South African Institute of Steel Construction, shall be used. Ensuring the availability of member shapes selected is the sole responsibility of the **Contractor.**

e) To facilitate the transport of tower members, these shall be limited to a maximum length of 12.5 m.

f) The steel selected for manufacturing purposes of poles and lattice structures should be suitable for hot dip galvanizing. Refer to section 10.

5.2.3 General Tower Steel Fabrication

a) All parts of structures shall be fabricated in accordance with the accepted shop drawings, and generally carried out in accordance with SANS 2001CS1. Workmanship and finish shall be equal to the best modern practice for transmission tower work. Pieces having the same markings shall be interchangeable.

b) All parts of the structure shall be neatly finished and free from kinks or twists. All holes, blocks and clips shall be made with sharp tools and shall be clean-cut without torn or ragged edges.

c) Shearing and cutting shall be neatly and accurately done. Cuts shall be clean without torn or ragged edges. Particular care shall be taken in the edge finish of plates subjected to large bending moments or large bends in fabrication.

d) Where necessary, to avoid distortion of the holes, holes close to the points of bends shall be made after bending of member. The use of a blow torch for cutting holes to size shall not be permitted. Plasma cutting machines can be used in combination with drilling or reaming to achieve final hole dimensions.

ESKOM COPYRIGHT PROTECTED

When downloaded from the WEB, this document is uncontrolled and the responsibility rests with the user to ensure it is in line with the authorized version on the WEB.

e) For **material less than 10 millimetres in thickness - punching holes to full size**, the diameter of the punch shall be less than 1.5 mm than the diameter of the die.

f) For **material greater than 10 millimetres but smaller than 18 millimetres in thickness** - punching holes to full size, the diameter of the punch shall less than 2.0 mm than the diameter of the die.

g) Sub punching for reamed work shall be such that after reaming, no punched surface shall appear in the periphery of the hole.

h) All holes shall be spaced accurately in accordance with the drawings and shall be located on the gauge or back mark lines. The maximum allowable variation in hole spacing for a bolt group, from that indicated on the drawings for all bolt-holes, shall be 1 mm. Miss drilled or miss punched holes may not be refilled by welding.

i) The **Contractor** may submit alternative manufacturing processes to the **Design Engineer** for approval before manufacturing commences other than those listed above.

5.2.4 Steel Bending

a) All forming or bending during fabrication, shall be only done according to methods accepted by the **Design Engineer**, such that it will prevent any embrittlement, cracking or loss of strength in the material being worked. The technical requirements for hot and cold forming are as follows:

1) The bending radius will be at least equal to 1.5 times the material thickness to be used, unless indicated otherwise on the drawings.

2) When hot bending of steel needs to be performed, an accurately controllable form of heating must be employed for both temperature and time.

3) The length of the section to be heated shall be clearly marked on the section, and heating equipment set accordingly.

4) The required bending tool shall be ready on the bending press with checking jigs available at all times. Checking jigs must be of high quality so that they do not deteriorate over time. Steel jigs should be used.

5) A dry run shall be made first to check that all systems are operational and that the proper tools are used.

6) Material shall be uniformly heated over the required length, to a temperature of between 750°C to 900°C. Oxidation of the material shall be minimised. An acceptable consistent means of temperature measurement of the steel temperature must be used.

7) Heated material shall be inserted into the bending press and formed while the temperature is still within the specified range. The bending process of a single bend must be done using a single action.

8) Formed material shall be checked immediately to ensure that they have been formed correctly.

9) Formed/bent material shall be left to cool naturally in open air. The use of any liquids or forced air to cool formed material is not acceptable.

10) Re-checks shall be made with the appropriate jigs when the material is cold.

b) If more than one bend is required on a section, the operation shall be repeated for each bend. Repeated heating of a bend position shall not be allowed.

c) New bends shall not deform the bend previously made.

d) For bending limitations on the flaring of flanges on angle sections, refer to the **Design Engineer**. Any other bending of angle sections shall be done hot.

e) For cold bending process, designs must take into account that the neutral axis distance shall be 0.33 of the plate thickness for plates thicker than 2 mm.

ESKOM COPYRIGHT PROTECTED

When downloaded from the WEB, this document is uncontrolled and the responsibility rests with the user to ensure it is in line with the authorized version on the WEB.

5.2.5 Bolts, Nuts and Washers

a) Bolts and nuts shall be at least Grade 6.8 and manufactured in accordance with DIN EN ISO 898-1.

b) After the corrosion protective coating (specified in the relevant line specification) has been applied, bolt holes shall be not less than 1.2 mm larger in diameter than the corresponding bolt diameter.

c) Bolts of different diameters can be used on the same tower (if so required by the approved tower drawing), provided that bolt sizes are not mixed in any one connection or plate. The minimum diameter size of bolt shall be 16 mm.

d) The threaded portions of all bolts shall project through the corresponding nuts by an amount not exceeding 15 mm and not less than 5 mm after tightening.

e) No threaded portion of any bolt shall occur within the thickness of the parts bolted together. To ensure this a single washer of suitable thickness shall be placed under the nut so that in all cases the required clamping force can be achieved.

f) The minimum thickness of washers shall be 3 mm and the maximum thickness shall be 6 mm.

g) No lock nuts or spring washers shall be used on the tower.

h) Where a pin-type connection is made at the top of masts on guyed structures, it shall be of a type secured by means of a bolt, nut and split pin. The split pin shall be of stainless steel (grade 304), with a minimum diameter of 20% of the bolt diameter. See also 5.2.6 (d).

i) All tower and hardware bolts will be manufactured with standard thread sizes so that they can be inspected with a go/no-go gauge prior to hot dip galvanizing. Bolts should be threaded according to SANS 1556-1: ISO Metric screw threads.

j) Undersize cutting of the male thread (i.e. bolt) before hot dip galvanizing will not be allowed as the quality inspection before hot dip galvanizing cannot be done with a standard go/no-go gauge. See also Annex A.

5.2.6 Shackles and extension links

a) The **Contractor** is to provide each tower with shackles and extension links (where applicable) for insulator string attachments of a size and strength suitable for attaching the conductor insulator assemblies, and earth conductor hardware assemblies to the tower at the appropriate positions.

b) The **Contractor** will provide tower shackles and extension links (where applicable) that conform to the corrosion protection system specified for hardware components in the relevant line specification.

c) Shackles, split pins and extension links shall be designed and fabricated according to the relevant Eskom and/or international standards.

d) Shackles for insulator string attachments shall be of the correct length and strength, to connect the insulator hardware supplied to the attachment point on the tower.

e) The shackles shall be of the type secured by means of a bolt, nut and split pin. Design of the shackles are not limited to classic straight leg shackles and can also be of the “hinge pin” type. The split pin shall be of stainless steel. The nominal diameter of split pins shall be a minimum of 3 mm for bolts up to and including 19 mm; 5 mm for bolts up to and including 28 mm; and 6 mm for bolts larger than 28 mm.

f) The orientation of shackles shall be as far as practically possible as follows:

   1) Suspension shackle for earth and phase conductors: When viewed on the transverse face, the legs of the shackle are to be in the vertical plane and at right angles (perpendicular) to the direction of the line.

   2) Strain shackle for earth and phase conductors: When viewed on the transverse face, the legs of the shackle are to be in the vertical plane parallel to the direction of the line.

   3) In all cases the relevant tower drawings should be consulted to ensure correct orientation.

ESKOM COPYRIGHT PROTECTED

When downloaded from the WEB, this document is uncontrolled and the responsibility rests with the user to ensure it is in line with the authorized version on the WEB.

5.2.7 Anti-Climbing Devices

a) Anti-climbing devices shall be designed and installed for each tower. These are to be attached at a height of approximately 3.5 m above ground level as per the relevant tower drawing. Swaged bolts should be used for attaching the anti-climbing devices to the tower.

b) Anti-climbing devices should be of palisade type as specified per Eskom issued tower drawings. Razor wrap-type is required only for refurbishment type of projects where barbed wire was originally installed or where tower drawings have not been converted to palisade type.

c) Razor wire anti-climbing devices shall be formed by stringing onto projecting steel supporting members, fencing wire consisting of 2.5 mm double-strand uni-directional twist pattern, galvanised steel razor wire. Spacing between strands shall not be more than 100 mm centres, the first wire being not more than 100 mm from the tower face, and forming an overhang of not less than 500 mm beyond the outer face of the tower. This overhang distance shall be maintained at the tower corners. On small anti-climbing devices such as on legs of guyed "V" towers, twin single strand razor wire may be used.

d) The strands of razor wire shall be secured at intervals, not exceeding 2 m, by spacers formed by pieces of the same razor wire bound to the strung barbed wire by galvanised binding wire. Where razor wire other than galvanised steel is specified, the spacers and binding wire shall be compatible.

e) Where the design of the towers is such that they can be climbed on the inner face, a similar anti-climbing device shall extend from the inner face of the tower inwards.

5.2.8 Fall Arrest Anchors

a) The **Contractor** shall install all fall arrest anchors. All the bolts attaching fall arrest anchors shall be punched and painted as for normal tower bolts. See Annex B.

b) Fall arrest anchors are for connecting a safety harness onto when working at heights. One leg of each tower shall be equipped with fall arrest anchors at minimum bolt spacing of 350 mm centres, starting immediately above the anti-climbing devices and extending to the highest cross arm or earth wire peak of the tower. The fall arrest anchor bolts shall be fixed to the main leg members of the tower by means of two hexagonal nuts. Holes for fall arrest anchor bolts shall be on all leg extensions from ground level up. No fall arrest anchors shall be installed below the anti-climbing device except for construction purposes.

c) The fall arrest anchors shall be uniformly spaced continuous and in line over gusset plates on main members only at a minimum bolt spacing of 350 mm on each flange of the main member. The connection of this fall arrest anchor bolt shall be ignored when calculating the number of bolts required. The orientation of the fall arrest anchor is as per Annex B or with the eye in the vertical plane.

d) For double circuit towers, two diagonally opposite legs shall be equipped with fall arrest anchors and shall extend to the underside of the top cross arm or earth wire peak.

e) Fall arrest anchors shall be marked and shall conform to material specifications as specified on the drawings in Annex B.

5.2.9 Anti-theft Measures and Marking

Anti-theft measures include the use of swaged bolts and the marking of members together with the appropriate anti-climbing device(s). All members, at least up to anti-climbing device level, must be fitted with swaged bolts in all holes. In addition the same members must be marked with the words “ESKOM” every 300 to 500 mm. The normal member identification marking as per 5.2.1 should remain at the end of all members.

Refer to “474-285: Standard for anti-theft measures” for more detailed anti-vandalism requirements.

5.2.10 Galvanising

Refer to Section 10.

ESKOM COPYRIGHT PROTECTED

When downloaded from the WEB, this document is uncontrolled and the responsibility rests with the user to ensure it is in line with the authorized version on the WEB.

5.2.11 Welding

For components of sufficient complexity to require welding, permission shall first be obtained from the **Design Engineer**. If permission is granted, the **Contractor** shall submit his manufacturing and welding procedure to the **Design Engineer** for acceptance before manufacturing commences.

5.2.12 Tower Prototype Inspection

a) Prior to the commencement of mass tower production, each tower type indicated for a project shall be test-assembled in the shop to the extent necessary to ensure accurate fit in the field. Prototype assembly shall include all tower components including all body and leg extensions, fasteners, step bolts, ACD and landing shackles, and stubs. The assembly procedure shall demonstrate that each tower section fits the adjacent section.

b) On successful completion of the tower prototype assembly the **Contractor** shall prepare a prototype assembly report which shall confirm the proper fitment of tower components and summarize the findings of the prototype assembly and all necessary modifications to the members. The report shall also include a list of all drawings which will be used for the mass production of towers.

c) The **Contractors** prototype inspection report shall have a validity period of three years.

d) Unless Eskom requests the prototyping to be done.

5.2.13 Testing and Inspection

a) The **Employer** reserves the right for the **Design Engineer** to inspect the work, and witness tests at any stage during manufacture.

b) Witnessed tests should be in compliance with the latest revision of SANS 50025 1 to 6 / EN10025 1 to 6 may require samples of steel from the Contractor's stockpile.

c) The **Design Engineer** or the SA Bureau of Standards may make tests, to ensure satisfactory quality of the hot dip galvanizing.

d) Certificates shall be obtained proving compliance with all aspects of material quality, manufacture and hot dip galvanizing.

5.3 Guy Ropes and Guy Attachments

5.3.1 Guy Ropes

a) Guy ropes shall conform to the latest revision of SANS IEC 61089.

b) Samples of guy ropes together with the relevant guy grip attachments, as well as representative anchor link attachments and tower attachments shall be tested as a complete system prior to use to confirm conformance to requirements.

5.3.2 Guy Attachments

a) All guy rope attachments shall conform to the latest revision of Eskom standard NWS 1074 – Guy strand grips for transmission lines.

b) The guy attachments shall be capable of developing the minimum breaking strength of the guy rope.

c) The thickness and contour of tower and guy anchor attachment points shall be co-ordinated with the guy attachments, to ensure that excessive bending forces or stress concentrations (for example inadequate chamfering of anchor link holes) are not transferred to the guy grips.

ESKOM COPYRIGHT PROTECTED

When downloaded from the WEB, this document is uncontrolled and the responsibility rests with the user to ensure it is in line with the authorized version on the WEB.

d) The grip connecting the guy rope to the anchor shall provide continuous adjustment, parallel to the guy rope, of 450 mm. After final tightening, an adjustment length of 300 mm shall be available for future adjustment for guyed type towers and masts in order to increase the tension of the guy. This remaining adjustment length is not applicable to cross rope type towers. Once the tower has been erected, plumbed, and the conductors strung and sagged, the adjustment shall be sealed or locked to avoid the possibility of tampering. The grip connecting the guy rope to the tower at the top may be similar in design, but non-adjustable.

e) Final acceptance shall be obtained from the **Design Engineer** for the types of guy attachments selected. Test reports, certifying the results of ultimate strength tests, cycle load tests, vibration tests and impact tests as well as material and fabrication standards, tests and drawings are to accompany requests for acceptance.

f) The guy ropes, guy fittings, shackles etc. shall be included as part of the complete tower.

g) For the cross rope type towers, three of the guys of the tower shall have no adjustment whatsoever. Only one of the four guys shall have tension adjustment, at the bottom connection only. In case mast rotation occurs due to incorrect guy lengths, consideration can be given to tension adjustment devices in more guys.

h) After installation of the mast foundations and anchors, the position and elevation of each tower shall be measured, and the required length of the guys shall be calculated with respect to the known height of the tower as per the tower drawing. Then the four guys shall be cut and the end fittings installed.

i) The tolerance for the complete length of the guys (calculated distance between centres of top and bottom attachment points) shall be ±20 mm from the calculated length. All guys shall be permanently marked, including the number of the tower and the pre-established position of each guy in each tower.

j) The **Contractor** shall propose convenient rigging hole(s) in the foundation anchor link to accommodate tensioning equipment for the correct tensioning of the guy rope during construction.

k) All ropes with compression end fittings shall be tested individually to a tensile load equal to 83% of the ultimate tensile strength of the steel rope in each case. Due to the testing, which causes permanent stretch, a reduction of 0.2% of total length shall be applied to the calculated manufacture length of all ropes, which are to be tested.

l) For guy rope tensions see 5.4.3 (e).

5.3.3 Fall Protection Systems

a) All **Contractors** are to ensure that a temporary fall protection system is installed on all structures at the required positions (vertical access and horizontal movement) for the duration of all construction activities. The system installed should conform to the necessary safety requirements and standards and be in line with good construction practices. The fall arrest anchor can form part of the temporary fall arrest system. After all construction activities are completed the system shall be removed excluding the fall arrest anchors which will be utilized for future maintenance.

b) Fall arrest anchors should be installed on all lattice towers, as per standard Eskom drawing. See Annex B.

c) **Contractors** to ensure that the applicable workforce undergo the required training in using the temporary fall protection system and are equip with the correct safety gear for the task at hand.

ESKOM COPYRIGHT PROTECTED

When downloaded from the WEB, this document is uncontrolled and the responsibility rests with the user to ensure it is in line with the authorized version on the WEB.

5.4 Tower Erection

The **Contractor** to supply detailed safe work procedures (for each tower type to be used on the project) of tower assembly, erection and dressing in accordance with the guidelines provided in the Line Specification.

5.4.1 Tower Material Handling and Storage

a) Tower steel in storage shall be supported off the ground with a sufficient number of blocks to prevent bending or warping of individual members.

b) Tower steel shall be handled with the use of nylon or fabric slings. The use of unprotected wire rope slings is not permitted.

c) Material shall not be dumped or dropped from trucks, but shall be carefully unloaded and stacked.

d) Material shall not be dragged on the ground.

5.4.2 Assembly and Erection of Towers

a) The applicable type of tower shall be erected on the completed foundation. All towers shall not be erected until the foundation concrete had at least 21 days to cure .and the concrete 7 day cube strength tested above 15MPa, the minimum 7 day cube strength requirement.

b) All towers shall be vertical within 2 mm in 1 metre in both the transverse and longitudinal directions when erection of the tower is completed, unless a different tolerance is specified.

c) Steel towers shall be assembled and erected so as not to overstress structural members, bolts or foundations. The structural assemblies shall be erected with the members supported in their proper relative position. Structural assemblies that are not sufficiently rigid to be raised in one piece shall be stiffened by means of temporary bracing during tower erection.

d) All towers shall be assembled in strict accordance with the drawings. The size and length of all bolts, washers, nuts, ring fills and plate fills shall be as specified on the erection or manufacturing drawings.

e) Contact surfaces of plates at the joints shall be cleaned of foreign materials and dirt before assembly. Wherever possible, bolts shall be installed with threads and nuts to the outside, and bolt heads to the inside of columns and trusses. Surfaces that are horizontal after erection shall have bolt heads down and nuts up.

f) A reasonable amount of drifting will be allowed in the assembly of members, but driving of bolts to correct mismatched holes will not be allowed.

g) If blind or partially blind holes, missed clips, or other minor miss-fabricated steel members are discovered in the field, the **Contractor** shall notify the **Eskom Site Representative** and receive his acceptance of the proposed repair measures prior to effecting field repairs.

h) Where drilling, punching or clipping is done in the field, all exposed steel surfaces shall be coated with materials endorsed by the Hot Dip Galvanizing Association or other material approved by the **Design Engineer**. See also section 10.

i) Suitable ladders shall be used wherever necessary during erection of towers. Such ladders and any temporary step-eye bolts shall be removed when erection work is not in progress.

j) After final tightening of all nuts, they shall be fixed in position by punching three indentations at approximately 120 degree intervals around the threads with a round pointed centre punch. The nuts and exposed bolt thread shall be painted with a paint system specified in the relevant line specification.

k) After erection, all towers shall be cleaned of all foreign matter or surplus paint.

5.4.3 Erection of Guyed Towers

a) Provision shall be made for the erection of guyed towers on terrain with various ground slopes.

ESKOM COPYRIGHT PROTECTED

When downloaded from the WEB, this document is uncontrolled and the responsibility rests with the user to ensure it is in line with the authorized version on the WEB.

b) The guy grips shall be installed in strict accordance with the manufacturer's recommendations, to ensure complete holding power of the guy grips.

c) Guy grips of the adjustable U-bolt design shall be carefully tightened to ensure equal loading of the two legs of the U-bolt. Neither nut shall be tightened more than 6 mm differentially without equalising the load on the nuts, nor when the desired tension is achieved. The nuts shall be even, with the nut faces parallel and at the same level before locking.

d) The guy rope will be cut to a length that will allow projection to just beyond the bottom of the U-bolt, and tied to obviate opening of the strands, effectively closing the open area of the U-bolt. The orientation of U-bolts shall be such that the legs are vertical (one on top of the other) with reference to the ground plane. This will prevent live stock from getting stuck in the U-bolts.

e) At the time of tower erection, all guys shall be tensioned to 10% of the UTS value as indicated in the relevant tower outline drawings. This shall be the tension in the guy after all fittings have been attached and all rigging used for tensioning the guy has been removed. The **Contractor** shall be responsible for establishing a suitable method of determining installed tensions in the guy rope.

f) Guy ropes shall be tensioned to hold the towers plumb and perpendicular to the line as soon as the towers are erected. Towers shall not be more than 2 mm in 1 m out of alignment from vertical in both the transverse and longitudinal direction, and the cross arms shall be perpendicular to the line within 0.3° of arc. In case of cross rope masts a tolerance of not more than 3 degrees will be allowed for mast rotation.

g) To achieve the correct tension in the guy wire, a guy grip clamp should be connected to a tensioning device, a dynamometer and to a temporary guy clamp bolted to the guy stub rigging hole. The guy should then be tensioned to half of the final tension specified using the rigging equipment. Once this is done, the tensioning of the U-bolt should commence by tightening the bolts until the tension showing in the dynamometer drops to zero.

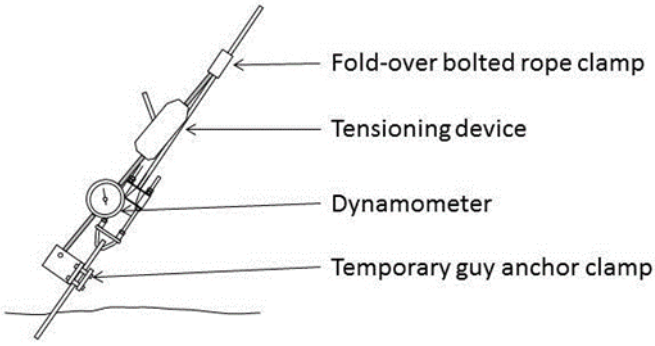

Figure 5: Checking correct tension in guy wire

h) The guys shall remain properly tensioned so that the tower remains plumb during, and after conductor stringing and clamping. Conductor stringing operations shall be halted if any guy becomes slack during the regulating operation of a section.

i) During erection, if it becomes necessary to leave the guys at reduced tension for longer than twenty-four hours, the **Eskom Site Representative** shall be informed immediately.

j) The **Design Engineer** shall accept the method of locking the guy grip and guy guard at the anchor end of the guy wires. The guy guard shall not be locked over the guy grip until the **Eskom Site Representative** has inspected, and accepted the guy grip installation and the presence of adequate locking.

k) All U-bolts of guys on ground level will be fitted with anti-vandal caps or other suitable methods subjected to Eskom's approval, to ensure that the bolts cannot be loosened.

ESKOM COPYRIGHT PROTECTED

When downloaded from the WEB, this document is uncontrolled and the responsibility rests with the user to ensure it is in line with the authorized version on the WEB.

5.4.4 Tower Labels

Tower labels are to be manufactured and installed as in "240-67561924 – Design, manufacturing and installation of transmission line labels".

5.5 Tower Dressing

a) Before any tower dressing can commence the tower must have been inspected and signed off by either the **Eskom Site Representative** or **Design Engineer,** indicating that the assembly and erection has been done in accordance with the relevant tower drawing(s) and method statement(s).

b) All rope assemblies, hardware assemblies, vibration dampers, aircraft warning spheres, bird flight diverters, bird guards and other assemblies must be installed in strict accordance with the supplier or manufacturer instructions or guidelines.

c) In the case of hardware assemblies, sample assemblies must be assembled in the contractor's camp according to the approved assembly drawings and inspected by the **Design Engineer** prior to starting dressing operations. This includes phase conductor assemblies, earth wire assemblies and OPGW assemblies for every tower type to be used on the project.

d) All tower dressing operations shall be made according to the accepted relevant safe work plan(s) which mitigates the risks identified with the method.

e) When assemblies are lifted into position or hoisted up towers, winches shall be used and not wheeled vehicles.

6. Stringing

6.1 Material Supply

6.1.1 By the Employer

a) The **Employer** will provide all "free issue" material to the **Contractor** in order to complete construction of the project.

b) Quantities and delivery shall be as per the agreed schedules between **Employer** and **Contractor**.

6.1.2 By the Contractor

a) The **Contractor** is to establish the correct quantities of all stringing materials required to complete the Works.

b) The **Contractor** is to provide off-loading and secure storage facilities and shall be held responsible for the proper protection and safekeeping of all material like conductor, earth wire and OPGW until the completion date. The **Contractor** shall be held responsible for any loss or damage to material after delivery.

c) Special lay-down areas are to be made especially for wooden packaging (wooden drums and crates) to prevent direct contact with soil. The lay-down area must be on sufficient high ground to prevent any material standing in water after rain or other wet conditions.

d) If materials that are housed by wooden packaging are on site for longer than 6 months, a longer term solution to storage is noted below and must be implemented to safe guard the contents lifespan:

A solution, which can be proposed or adopted from the preferred below (with acceptance from LES), will require the wooden packaging be placed on a flat elevated position, with sufficient drainage to avoid the wood coming in direct contact with the soil. An elevation of the wooden packaging can be created by using concrete or wooden blocks.

ESKOM COPYRIGHT PROTECTED

When downloaded from the WEB, this document is uncontrolled and the responsibility rests with the user to ensure it is in line with the authorized version on the WEB.

Further, due to the unknown period as to when the contents of the wooden packaging will be re-used, all the wooden packages must be covered to avoid direct and continuous contact with sunlight. The covering should not be blanketing but rather shade creating and the space between individual packaging should be sufficient for air to flow between the packaging. An optional solution to this is to use Tarpaulin covering.

e) The **Contractor** is to verify and confirm the quantities of material supplied by the Employer. Conductor use is to be optimised to obviate excessive waste. A nominal amount (dependant on the terrain - max. 3%) of phase and earth conductor will be allowed for sags and jumpers. Off-cuts and waste shall be returned to the Employer upon completion of the works as scrap.

f) All other surplus material shall be returned to the **Employer** upon completion of the works.

6.2 Installation of Phase and Earth Conductors

All come-along clamps must be colour-coded to indicate the difference between clamps suitable for aluminium conductor and clamps suitable for steel wire. A **silver** colour is to be used for aluminium and **brown** for steel wires.

6.2.1 Changes in Phase Configuration

Where stringing through towers require changes between horizontal, vertical or delta phase configurations, the **Contractor** shall confirm the alignment of the phases with the **Design Engineer** to ensure that the minimum phase clearances are maintained as well as the correct phase orientation(s).

6.2.2 Crossings, Notices and Permits

a) Substantial temporary conductor supports shall be used, or equally effective measures taken, to prevent encroachment of statutory clearances, or other clearance requirements stated in the permits, between the conductor being strung and other power or communication lines, roads or railways being crossed.

b) Suitable structures under each phase will be erected to protect all fences and/or gates from conductor damage during stringing.

c) Temporary changes in poles, fixtures or conductors of lines being crossed will only be carried out if accepted by the **Eskom Site Representative**. The **Contractor** shall indicate any changes considered necessary and the **Eskom Site Representative** will co-ordinate any changes with the owner of the service.

d) The **Contractor** shall notify the **Eskom Site Representative**, at least 45 days in advance, of the time he intends to make crossings of power lines, communication lines, major roads or railways. This notification shall state the location of the crossing to be made, the approximate time of the permit, the length of time that will be required to affect the crossing, and the duration of permit requested. The **Eskom Site Representative** will endeavour to accommodate late changes to the stringing programme; however the **Employer** will not be liable for any time delays or costs resulting from the late programme changes.

e) The **Employer** will endeavour to arrange that all crossings be made with the crossed line de-energised. The time of line outages shall be kept to the absolute minimum. If line outages are not possible, alternative arrangements for live crossings should be made. A method statement of how this power line crossing is intended should be submitted to the **Design Engineer** for acceptance before work commences. All preparatory work shall be done prior to the work permit coming into effect. Upon completion of the work, the **Contractor** shall immediately notify the **Eskom Site Representative** that the lines are clear and release his working permit.

ESKOM COPYRIGHT PROTECTED

When downloaded from the WEB, this document is uncontrolled and the responsibility rests with the user to ensure it is in line with the authorized version on the WEB.

f) Suitable crossing support structures shall be used when obstacles like line, road, rail and other crossings are to be crossed. These support structures shall include but is not limited to prevent the conductors, earth wire or OPGW to be strung to come into contact with the obstacle to be crossed and at all times allow safe working distances, clearances to be maintained under live conditions and impact loads. Detailed safe work procedures indicating type of structures, methodology and material to be used are to be sent to the **Design Engineer** for acceptance prior to constructing the crossing.

g) The preferred live line crossing methodologies that can be used include:

1) Wooden H-poles “Rugby poles” with netting all suitably anchored. Typically used for 11 kV to 66 kV

2) Wooden Frame with netting and 2 cranes all suitably anchored. Typically used for 66 kV to 400 kV

3) Two cranes with running blocks and netting in between all suitably anchored. Typically used for 66 kV to 765 kV.

h) Alternatives to above methods should be submitted to the **Design Engineer** for acceptance.

i) Requirements for OPGW or E/W stringing over live conductors

1) Minimum load that needs to be supported by the proposed crossing systems to be provided by **Design Engineer**

2) Temporary Works Engineer to approve systems

3) Crossing systems to be accepted by Lines Engineering Services

6.2.3 Handling and Stringing of Conductors

a) All phase and earth conductors shall be tension strung using the accepted sag and tension tables for the relevant phase and earth conductor(s).

b) The equipment and methods used for stringing the conductors shall be such that the conductors will not be damaged. Particular care shall be taken at all times to ensure that the conductors do not become kinked, twisted or abraded in any manner.

c) Stringing shall be done in daylight hours only.

d) The **Contractor** shall make suitable arrangements for temporary staying of towers, and anchoring of conductors when necessary. Conductors may not be anchored to any portion of any tower, except strain towers, and then only at the points designed for conductor attachment. Temporary anchoring to footings and guy anchors will not be permitted. Where temporary anchoring is required, suitable temporary anchors shall be provided. Installation and removal of temporary anchors will be the **Contractor's** responsibility.

e) Matched conductor drums, marked with the same number followed by the suffix A, B, C etc., shall be used for each pull of multiple conductors per phase to ensure even sag characteristics and a minimum number of joints. The **Contractor** shall select the most suitable sets of matched conductor drums for each stringing position to minimise wastage of conductor. The **Contractor** shall keep an accurate record of the phase and earth conductor drum numbers and their position in the line. On Completion a copy of these records shall be supplied to the **Design Engineer** and **Eskom Site Representative**.

f) Where multiple conductors per phase are used, these shall be attached to a single running board and strung simultaneously to ensure matched sags. The individual conductors shall be attached to the running board by auxiliary clamps that will not allow relative movement of strands or layers of wire, and shall not over tension or deform individual wires.

ESKOM COPYRIGHT PROTECTED

When downloaded from the WEB, this document is uncontrolled and the responsibility rests with the user to ensure it is in line with the authorized version on the WEB.

g) Running boards shall pass through running blocks smoothly without hanging, catching or causing wide variations in pulling tensions, damage to the running blocks or over stressing of towers. The pulling line shall be a non-rotating type, which will not impart twist or torque to the running board or conductors. Swivels shall be used to attach the pulling line and conductors to the running board. Swivels shall be small enough to pass through the running blocks without damage to either, and shall have ball bearings and be free turning under load.

h) All conductors shall be strung by the controlled-tension method by means of rubber faced, double-bull wheel-type tension stringing equipment. This equipment shall be so designed that there shall be no conduction of the heat generated by the braking action, to the bull wheels. There shall be appropriate mechanical braking on the reels to prevent loose conductor between the reels and the bull wheels, but sufficient tension to pull the conductor in between layers remaining on the reel. Brake controls shall be positive and fail-safe in order to minimise the danger of brake failure.

i) The tension shall be controlled individually on each conductor, and when the desired tension is obtained, the same constant tension shall be held so long as the brakes are left at this setting. Tensions, while pulling, shall be sufficient to clear all obstacles safely without damage to the conductor. At no time shall the pulling tension exceed the tension shown on the sag charts. Pulling of more than one drum length of conductor shall be subject to the **Eskom Site Representative's** acceptance.

j) Adequate protection shall be provided where there is danger of conductors being damaged or scratched, in order to limit corona on conductors. Conductors shall not be left in contact with the ground, vegetable matter or any conducting or semi-conducting material. Wood lagging or similar material shall be used to protect the conductor when working at ground level. Ensure all materials in contact with the conductor are free of nails and other deleterious substances.

k) Radio communications shall be used to relay information and instructions between the conductor tensioning station, intermediate check points, mobile stations and the pulling station at all times during a stringing-tensioning operation. An outage of radio communications at any station will require immediate stopping of conductor pulling operations.

l) The placement of tensioning and pulling equipment shall be such that the vertical angle of pull on a cross arm during stringing operations shall not be more than 20° relative to the horizontal. Conductors shall not be pulled around angles that exceed 20° from the normal direction when pulling the conductor. With tandem-mounted running blocks, the pulling angle shall not exceed 40°. With triple mounted running blocks, the pulling angle shall not exceed 60°. The centre running block shall be adjustable and aligned so that all three running blocks contribute equally to reducing bending on the conductor.

m) The sheaves shall conform to the conductor manufacturer's recommendation as to diameter, and to size and shape of groove for the size of conductor used. Sheaves shall have a minimum diameter of fifteen times the conductor diameter at the base of the groove. Sheave surfaces that will be in contact with the conductor shall be coated with neoprene or rubber. This covering shall be kept clean and free of materials that might damage the conductor surface. The conductor sheaves shall have a separate groove for the pulling line. The pulling line shall not run on the rubber covered conductor grooves. The sheaves shall be inspected for damage or contamination before each usage. The **Contractor** shall not use any sheaves rejected by the Eskom Site Representative due to damage or excessive wear. The **Contractor** shall immediately remove such sheaves from the site.

n) During stringing operations and before regulating, if it becomes necessary to leave the conductor in the blocks for longer than eighteen hours, the conductor shall be left at a much reduced tension, and the **Eskom Site Representative** immediately notified. This reduced tension must be recorded in Newton or kg together with the ambient temperature. The percentage of sag, spans involved, time interval, and correction for creep shall be noted, and records forwarded to the **Eskom Site Representative.** In no case shall conductors be left with less than the following clearances:

1) Cultivated or open country: 6 metres,

2) Roads and rails: 8 metres,

3) Railroad tracks: 9 metres.

ESKOM COPYRIGHT PROTECTED

When downloaded from the WEB, this document is uncontrolled and the responsibility rests with the user to ensure it is in line with the authorized version on the WEB.

o) If it becomes necessary to leave the conductor during stringing for more than 72 hours in the running blocks prior to regulating and clamping in, the contractor shall recommend corrective action and submit to the **Design Engineer** for approval.

p) Bird caging of the conductor and/or earth conductor during stringing shall be avoided by the appropriate positioning of conductor drums relative to the tensioning equipment, as well as other means necessary to minimise conductor/earth conductor bird caging.

6.2.4 Joints

a) Before stringing commences, the **Contractor** will be required to compress sample phase and earth conductor mid span joints, as well as phase conductor dead/end assemblies on site in the presence of the **Eskom Site Representative**, using the matched and numbered dies and compressors intended to be used on the line during stringing. The length of conductor between any two fittings on the sample shall be not less than 100 times the overall diameter of the conductor. Note that for OPGW, the **Contractor** shall make a sample assembly and subject the assembly to the same test procedure as detailed in the next paragraph.

At an acceptable testing authority a tensile load of about 10% of the breaking load of the conductor shall be applied and the conductor/earth wire/OPGW shall be marked in such a way that movement relative to the fitting can easily be detected. Without any subsequent adjustment of the fitting, the load shall be steadily (as per the latest version of SANS IEC 61089) increased to 90% of the breaking load and maintained for 1 min. There shall be no movement of the conductor relative to the fitting due to slip during this period of 1 min and no failure of the fitting. The conductor/earth wire/OPGW shall then be loaded to failure, and the joint shall again withstand a minimum load of 95% of the minimum breaking strength of the conductor for it to be deemed acceptable. If the sample joint fails this test, a further three (3) sample joints shall be tested and will all be required to pass the above. If any one or more of these sample joints fail, no stringing shall commence until the **Design Engineer** is satisfied that the jointing equipment is acceptable. A copy of the test report shall be forwarded to the **Design Engineer** prior to stringing. The test report should include the project name and all relevant measurements such as “across-flat” widths, length of samples, suppliers of conductor and compression fittings, equipment used for crimping and dies used for crimping.

b) As far as possible, complete drum lengths of conductor and earth conductor shall be used to reduce the number of joints. Joints shall not be closer than 15 metres to the nearest suspension tower or 30 metres from the nearest strain tower. Joints shall not be installed in spans crossings railways, proclaimed roads, power or important communication lines. In no case shall more than one joint be installed in a given span, nor shall a joint be installed in a span dead-ended at both ends. The minimum distance between joints shall be 300 metres.

c) Whenever joints or dead-ends are made, auxiliary erection clamps and hauling devices shall not be placed closer than 8 m to the point of joint or dead-end. The auxiliary erection clamps shall not allow relative movement of strands or layers of wire, and shall not birdcage, over tension or deform individual wires.

d) When dead-ends are to be done on conductors, **Contractor** is to confirm the location of the new dead-end, by measuring of the full assembly length from the tower landing plate to dead-end location as per hardware and insulator supplier accepted drawings. The strain assembly must be assembled such that the extension links/ sag adjusters are in a midway position allowing adjustment either way. When the location of the dead-end is verified on the conductor, basic clearance checks to tower from that location must be done, using the live end exposed fittings and live end insulator corona ring positions. This will prevent any rework later on if clearances are incorrect. If clearances are not acceptable, the **Contractor** is to inform the **Design Engineer** so that technical options can be looked at to rectify issue. **Contractor** has to have a labelling philosophy in place when working with bundle conductor configurations, so that each conductor in that bundle is marked and cut as per allocated location in strain assembly. All dead-end flags must be orientated as per drawings accepted by **Eskom**.

ESKOM COPYRIGHT PROTECTED

When downloaded from the WEB, this document is uncontrolled and the responsibility rests with the user to ensure it is in line with the authorized version on the WEB.

e) The conductor shall be cut with a ratchet or guillotine cutter to produce a clean cut, retaining the normal strand lay and producing minimum burrs. The aluminium strands shall then be stripped from the steel core by using an acceptable stripper. Under no circumstances shall high tensile hacksaw blades be used to cut conductor.

f) The conductor shall be laid out for a distance of 15 metres and straightened at the ends before preparation for installation of joints or dead-ends. Compression jointing shall be carried out on a clean tarpaulin or jointing trailer. The lay of wires shall be tightened before the first compression is made. The conductor strands shall be cleaned by wire brushing and an accepted non-oxidising paste applied. Compression joints shall be carefully made so that the completed joint or dead-end is as straight as possible. To minimise distortion, the joint should be rotated 180° (rotation to be in the same direction as the lay of the wires) between each compression operation, with the joint and conductor being fully supported in the same plane as the compression jaws. If, required by the **Eskom Site Representative**, the completed joint or dead-end shall be straightened on a wooden block by using appropriate tools. Any damaged joints or dead-ends shall be replaced.

g) After compression joints have been completed, all corners, sharp projections and indentations resulting from compression shall be carefully rounded. All other edges and corners of the fitting that have been damaged shall be carefully rounded to their original radius. Nicked or abraded surfaces shall be carefully smoothed. Tape, tape residue and filler paste shall be removed from fittings and conductors.

h) Sufficient notification shall be given to **Eskom Site Representative** prior to the installation of compression fittings. Unless previously agreed all joints and dead-ends shall be installed in the presence of the **Eskom Site Representative**.

i) Under no circumstances shall compression joints be allowed to pass over the running blocks unprotected. Suitable exterior covering/protection must be applied over compression joint after crimping to allow safe movement over running blocks.

j) During the progress of the stringing, the **Contractor** shall keep an accurate record of the spans in which conductor and earth conductor joints are made, the date of assembly onto the conductor. A copy of these records shall be supplied to the **Design Engineer**.

6.2.5 Preparation of Metal to Metal Contact Surfaces

All current carrying connections, contact surfaces, clamps, conductor and terminals shall be prepared as follows:

a) wipe the mating surfaces free from grease and dirt (except the bores of compression sleeves);

b) apply 1 mm thick coating of approved jointing compound to the surfaces using a non-metallic spatula or similar tool;

c) scrub all the coated surfaces thoroughly with a wire brush which is new or which has been used solely for this purpose;

d) wipe off the jointing compound;

e) apply a fresh 1 mm thick coating of compound; and

f) After a period of not more than one minute make the connection in the normal manner and remove excess extruded compound.

Note: No jointing compound squeezed out by clamping pressure shall be used in making further joints. The Contractor shall apply such compound as necessary for making the connections by the method outlined above. On bolted connections care shall be taken during the tightening to avoid overstressing the bolts or components of the clamps. A torque wrench shall be used for tightening each bolt to the required torque.

g) Tighten all bolts and U-bolts to their specified torque on suspension clamps and other relevant hardware.

h) Leave clamps for 24 hours to allow aluminium conductor to expand and contract.

ESKOM COPYRIGHT PROTECTED

When downloaded from the WEB, this document is uncontrolled and the responsibility rests with the user to ensure it is in line with the authorized version on the WEB.

i) Check all bolts to ensure that they are still at the required torque as stipulated on the components or hardware assembly drawings.

j) Ensure Wedge Lock or Belleville washers are installed on all jumper flags.

6.2.6 Conductor Repairs

a) Damage caused by the **Contractor** shall be repaired in a manner determined by the **Eskom Site Representative.** Damage is any deformity on the surface of the conductor that can be detected by eye sight or by feel. Damage includes, but is not limited to nicks, scratches, abrasions, kinks, bird caging, and popped out and broken strands.

b) Depending upon the severity of the damage and the length of damaged section, the repair shall be made by careful smoothing the deformity with extra fine sandpaper, covering with preformed repair rods, installing a compression-type repair sleeve, or by cutting and splicing.

c) Kinked, bird caged or severely damaged sections of conductor shall be cut out. When there is repeated damage in the same span, or in consecutive spans, the entire conductor in such spans shall be replaced.

d) All damage caused by auxiliary erection clamps or other gripping devices shall be repaired or cut out, as instructed by the **Eskom Site Representative**, before the conductor is sagged.

e) Preformed repair rods shall be installed if no more than one strand is broken, or nicked deeper than one third of the strand diameter, or when a number of strands are reduced in area not exceeding the area of one strand. Not more than two sets of preformed repair rods shall be installed on any one conductor in any given span.

f) A compression-type repair sleeve shall be installed, if not more than one third of the outer strands of the conductor are damaged over a length of not more than 100 mm, or not more than three strands are broken in the outer layer of conductor and the area of any other damaged strands is not reduced by more than 25%.

g) Compression-type repair sleeves shall not be installed on one conductor in a given span if it already contains a conductor splice, conductor dead-end or another compression-type repair sleeve.

h) If damage exist in the outer and inner aluminium layers but no damage exist on the steel centre core for ACSR conductors, then a preformed type line splice can be considered. Details of the proposed repair should be provided to the **Design Engineer** for final acceptance.

i) Damage to the steel strands or aluminium strands, exceeding the stated limits for repair sleeves, shall be cut out and spliced by means of a compression type mid-span joint.

j) Any foreign matter such as pitch, paint and grease placed on the conductor and fittings by the **Contractor** shall be removed by methods accepted by the **Eskom Site Representative** prior to regulating.

6.2.7 Regulating

a) To have better quality control on stringing, the contractor must submit a schedule of how he intends stringing the strain sections and give locations of puller and tensioner used for the **Eskom Design Engineer** to review for acceptance. The tensioner must be behind the tower to be strained off. Should there be a deviation from this process, then the **Contractor** must supply a detailed method statement to demonstrate how he can safely execute the stringing operation. This deviation must be sent the **Eskom Design Engineer** for acceptance prior to commencement of any stringing operations. The **Contractor** is to ensure that appropriate equipment and accompanying hardware is selected for the specific application.

b) The **Contractor** shall string all conductors and earth conductors to the appropriate sags and tensions as determined from the conditions specified in the Works Information. The calculation of clamping offsets shall be the responsibility of the **Contractor**, based on sag tension charts supplied by the **Design Engineer**. Such calculations shall be submitted to, and accepted by the **Design Engineer** prior to regulating.

ESKOM COPYRIGHT PROTECTED

When downloaded from the WEB, this document is uncontrolled and the responsibility rests with the user to ensure it is in line with the authorized version on the WEB.

The appropriate conductor temperature to be used for sagging shall be determined by means of a Celsius thermometer inserted in the end of a suitable length of conductor or earth conductor from which a 150mm length has been removed from the centre strand, or other accepted method. The wire with the thermometer inserted shall be hung at cross arm level for at least two hours before the temperature is read.

c) The length of a section of phase and earth conductors to be regulated at any one time shall be limited to that length that will assure attainment of correct sag based upon terrain and obstructions.

d) Where there are a large number of suspension towers between strain towers, regulating of phase and earth conductors shall be done at intervals of 3 to 5 spans. In hilly country the conductors may require to be temporarily anchored one span away from the spans being regulated. The sag spans chosen shall be near each end of the section pulled for single conductor lengths, and near each end and at the middle for double conductor lengths. In addition, the sags shall be checked in all spans over 500 metres. In unusual situations, the **Eskom Site Representative** may require additional checks.

e) The **Contractor** shall provide, and maintain in good condition, suitable dynamometers, sag boards or other accepted apparatus for the proper checking of the work. Dynamometers shall read in Newton and shall be tested and recalibrated at regular intervals. The **Contractor** shall keep dynamometer calibration certificates at the site office.

f) The **Contractor** shall notify the **Eskom Site Representative** at least twenty-four hours prior to any planned regulating operation. No regulating shall be done except in his presence, unless otherwise authorised. The **Contractor** shall provide labour and equipment, for signalling and climbing purposes as requested by the **Eskom Site Representative**, to facilitate his inspection of the sag.

g) In pulling up the conductor, caution shall be used to avoid pulling the conductor above sag height.

h) The maximum elapsed time from the beginning of the pulling operation to the completion of the regulating operation shall not exceed seventy two hours, nor shall the maximum elapsed time between the completion of the regulating operation and the completion of the clamping operation exceed seventy two hours. Conductor remaining in the blocks longer than the established limits shall be subject to inspection and, if damaged, replaced. The **Contractor** shall provide labour and equipment as requested by the **Eskom Site Representative** for this purpose, as well as for inspection in the event of sudden windstorms.

i) No minus regulating tolerance will be allowed. A plus regulating tolerance of 0.01 times the theoretical sag, but not exceeding 150 mm will be allowed, provided all conductors in the regulating span assume the same relative position to true sag. Sags of conductors in the same bundle shall not vary more than 35 mm relative to one another. Sag variances between phases shall not be apparent to the naked eye.

j) When finally adjusting the sags of conductors and earth conductors, the sag shall be checked with sag boards, or other accepted methods in spans where the levels of the two towers are approximately the same, and the span length is approximately equal to the equivalent span length of the strain section. Upon completion of this regulating operation, as many successive spans as can be observed from the sag board position shall be checked for uniformity of sag.

k) All conductors, except for conductors in sag sections over flat terrain, shall be plumb-marked at each structure for the complete section regulated, before clamping-in or dead-ending of the conductor is begun. Conductors shall be marked with paint crayon or wax pencil - not with metal objects.

l) Insulator strings on three suspension towers adjacent to a new section to be regulated shall be clamped to the conductor before temporary anchors are removed and regulating of the new section begins. These insulators shall remain in the plumb position upon completion of regulating of the new section and during plumb-marking.

m) Regulating operations shall be conducted during daylight hours only. Regulating operations shall be suspended at any time, when in the opinion of the **Eskom Site Representative**, wind or other adverse weather conditions would prevent satisfactory regulating.

ESKOM COPYRIGHT PROTECTED

When downloaded from the WEB, this document is uncontrolled and the responsibility rests with the user to ensure it is in line with the authorized version on the WEB.

n) Records of temperature sag and tension for each section regulated shall be kept by the **Contractor**, and a copy supplied to the **Design Engineer.**

o) On completion of regulating of a section of the line, the **Contractor** shall measure and record all clearances over roads, power lines, communication lines, railways etc. along the route. A copy of these clearance records is to be submitted to the **Design Engineer**. The **Eskom Site Representative** is to be notified immediately of any discrepancy found between the actual clearance and that shown on the profiles.

6.2.8 Clamping of Conductors

a) The conductors and earth conductors shall be clamped-in by the **Contractor** after the **Eskom Site Representative** has accepted the regulating operation as being in full compliance with the standards and stringing data. Where offsets are required, the conductors shall be accurately adjusted in accordance with the offset clamping information developed by the **Contractor.**

b) All conductors in a sag section shall normally be clamped-in, beginning at the second structure from the forward end of the pull, and shall progress structure by structure, until the conductors at all structures are clamped-in.

c) The **Contractor** shall exercise extreme care in moving the phase and earth conductor from the stringing blocks to the suspension clamps.

d) Where armour rods or conductor clamps incorporating armour rods are called for, they shall be installed in strict accordance with the manufacturer's recommendations. Armour rods shall be centred in each suspension clamp in such a manner that the clamp is not more than 50 mm from the centre of the rods. Variations between the ends of the individual rods shall not exceed 12 mm. Aluminium rods shall be handled with the same care as the conductor.

e) Properly calibrated torque wrenches shall be used to tighten suspension clamp and dead-end bolts to the manufacturers' specified torque values. U-bolts shall be drawn up evenly to torque values. Bolts shall not be tightened excessively. Proof of calibration shall be submitted to the **Eskom Site Representative**.

f) All conductor support assemblies shall be installed such that the insulator string will hang in a vertical plane through points of insulator string attachment to structure, with the structure properly aligned.

6.2.9 Vibration Dampers for Single Conductors

a) Where vibration dampers are specified, these shall be installed at each suspension and strain point. The number of dampers to be installed per span shall be as recommended by the manufacturer. The spacing from the mouth of the strain clamp or the centre of the suspension clamp shall be in accordance with the manufacturer's recommendations.

b) If the use of armour rods makes it impossible to meet this spacing, the first damper shall be positioned at the end of the armour rods, and any additional dampers shall then be spaced from the first damper. Dampers shall be located within 25 mm of their correct position.

c) Vibration dampers shall be installed when clamping the conductor, but only after the conductor has been securely fastened in the conductor support assembly.

d) Stockbridge type vibration dampers shall be installed so that they hang directly under the conductor.

The installation of vibration dampers shall be in accordance with the manufacturers' recommendations.

6.2.10 Bundle Conductor Spacers and Spacer Dampers

a) On lines employing more than one conductor per phase, spacers or spacer-dampers, shall be installed to separate the individual conductors of each phase.

b) Conductor spacers or spacer dampers shall be installed immediately after clamping the conductors, but in no instance shall conductors be allowed to remain without spacers installed for longer than seventy-two hours after clamping.

ESKOM COPYRIGHT PROTECTED

When downloaded from the WEB, this document is uncontrolled and the responsibility rests with the user to ensure it is in line with the authorized version on the WEB.

c) Notwithstanding the allowed times between stringing, regulating, clamping and fitting of vibration dampers, spacers or spacer dampers, the overall time for these operations shall not exceed six days (144 hours).

d) Conductor spacers or spacer dampers shall be installed within 1 000 mm of the positions as specified by the manufacturer in a staggered (non-equal) spacing distance between spacer dampers, as per the manufacturers' installation instructions or spacing chart.

e) Conductor spacer carts used by the **Contractor** to move his men along the conductor shall be furnished with neoprene or rubber lined wheels to support the carts on the conductors. The carts shall be equipped with an odometer, which shall run on one sub-conductor and indicate distances in metres. The odometer shall be set in such a manner, as to give the distance from the suspension clamp to all cart positions along the span on the centre phase from which all the hardware on the three phases will be aligned perpendicular to the centre line of each span. Spacer-dampers will also be installed perpendicular to the sub-conductors of each phase along the catenary.

6.2.11 Aerial Warning Spheres and Bird Flight Diverters

a) Bird Flight Diverters should be installed on both the earth wires / OPGW, in the case of a line having two earth wires, in a staggered alternating configuration as indicated in the figure below.

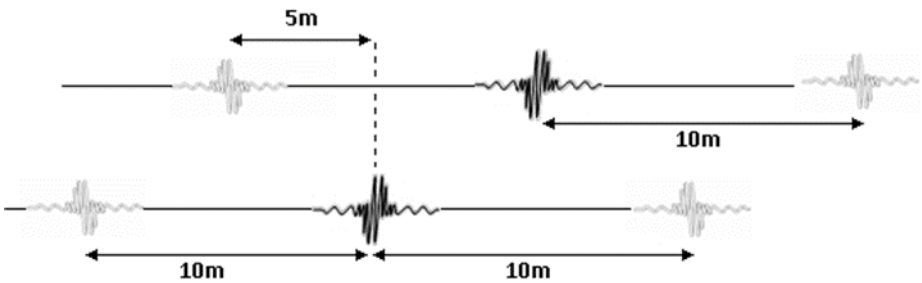

Figure 6: Installation of bird flight diverters

b) For the installation of Aerial Warning Spheres, it is recommended to use the following procedure:

1) Install the Aerial Warning Spheres on a single ground wire, but alternate the colours (white and red or orange)

2) The Aerial Warning Spheres have to be installed on the highest wire of the affected line spans, typically on the ground wires

3) They are to be located 30m from the tower, and 30m from each other along the span. White and Red/Orange Aerial Warning Spheres should alternate along the span, as shown in figure 7. This method will guarantee that the pilot sees the alternating affect from any approach angle.

4) If bird flight diverters are required on the same span, they will be installed as usual with the ones clashing with the position of the Aerial warning spheres omitted.

ESKOM COPYRIGHT PROTECTED

When downloaded from the WEB, this document is uncontrolled and the responsibility rests with the user to ensure it is in line with the authorized version on the WEB.

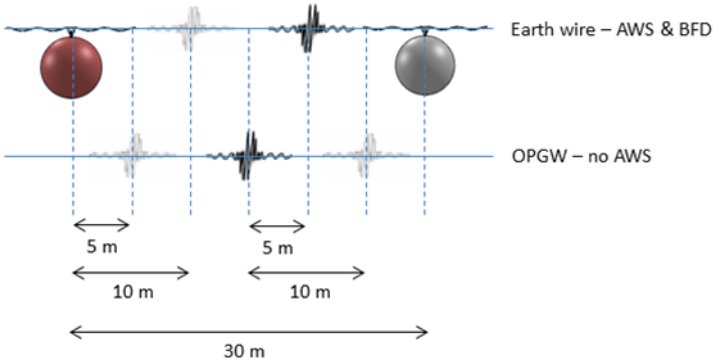

Figure 7: Installation of Aerial Warning Spheres

6.2.12 Jumpers

a) The jumpers shall be formed to provide the maximum amount of clearance from earthed hardware, and tower steelwork. Their positioning shall comply with the clearances stated under the specified displacements.

b) The **Contractor** shall supply labour and equipment to assist the **Eskom Site Representative** in measuring clearances from jumpers to earthed hardware if requested.

c) Jumpers not meeting the required clearances shall be removed and replaced.

6.3 Stringing of OPGW

In general the stringing of OPGW is the same as for the earth wire but the relevant installation standard for OPGW need to be adhered to.

7. Insulators

This section considers the handling, storage, transportation and installation practice of insulators.

The **Contractor** will adhere to the following guidelines regarding insulators.

7.1 Receiving

a) Inspect crates for damage upon delivery to site.

b) Open the crate carefully, ensuring that all tools used are kept well away from the insulators.

c) On removal of the lid and any internal battens, remove or flatten all exposed nails.

d) Any packaging damage must be:

   1) Reported immediately to the **Eskom Site Representative**.

   2) The supplier's representative must be immediately advised and the crate set aside for inspection by the manufacturer's representative, his insurance assessor or the relevant Eskom technical or quality assurance personnel.

   3) Each insulator from the damaged crate must be visually inspected for damage.

   4) Damaged insulator units must be marked to prevent inadvertent later use.

e) Check that the type numbers on the insulators agree with those on the order and the packing lists.

f) Sample and routine test reports must be included with the delivery.

g) Return the insulators to their original crates and re-seal.

ESKOM COPYRIGHT PROTECTED

When downloaded from the WEB, this document is uncontrolled and the responsibility rests with the user to ensure it is in line with the authorized version on the WEB.

7.2 Storage

a) Insulators must preferably be stored in their original crates.

b) Insulators in their crates must preferably be stored indoors.

c) Crates stored outdoors must be in pressure treated lumber rather than regular lumber or cardboard boxes.

d) Crates should be stored off the ground.

e) Stacking of boxes/crates must not cause squashing of lower boxes/crates. In the event of damage, point c) in the “Receiving” section 7.1 must be followed.

f) Heavy material must not be stored on top of boxes/crates due to potential damage.

g) If insulators are to be stored out of boxes/crates, care must be taken to protect them from damage:

1) They must not be stacked on top of each other.

2) Other material must not be placed on top of them.

3) Accepted storage methods include using designated bins, suspension hooks, PVC pipes or builders’ tubes

h) Storage areas must:

1) Avoid water ingress into the boxes/crates or areas of standing water.

2) Be free of oils and petrochemical products.

3) Avoid possible rodent damage

7.3 Loading and off-Loading

a) Care must be exercised when using forklifts, so as not to penetrate boxes/crates and damage the insulators. Damaged boxes/crates will be subjected to point c) in the “Receiving” section 7.1.

b) Any nails or screws left exposed on removal of the box/crate lid, or internal batons, must be removed prior to removing insulators from the crate to prevent damage.

c) For polymer insulators shipped in plastic protective covers, the cover should be cut at the end only and not along its length.

7.4 Transport to site

a) Where possible, insulators must be transported in their original boxes/crates.

b) For the transport of unpacked insulators:

1) PVC pipes and builders’ tubes can be used.

2) If protective coverings cannot be used, then the insulators should be stacked side-by-side.

3) Avoid placing objects on unprotected insulators.

4) Insulators should not be tied down using ropes, chains etc.

7.5 Visual Inspection of Insulators

a) Insulators must be visually inspected for damage prior to installation.

b) For polymer insulators, the following can be visually inspected:

1) Bonding of the rubber to the fibreglass rod and end fitting area.

2) Cracks or splits on the sheds and sheath.

3) Knife cuts.

ESKOM COPYRIGHT PROTECTED

When downloaded from the WEB, this document is uncontrolled and the responsibility rests with the user to ensure it is in line with the authorized version on the WEB.

4) Poor hot dip galvanizing or corrosion on the end fittings.

5) Mould accumulation. A method for mould removal should be suggested by the **Eskom Site Representative**. Preferably use water and a cloth to clean. Do NOT use solvent/oil-based detergents or abrasive materials to clean.

6) Unclipped sheath sections

7) Rodent damage

c) For glass insulators, the following can be visually inspected:

1) The clarity of the glass and streaks or cracks developing.

2) The porosity of the cement.

3) Poor hot dip galvanizing or corrosion of the end fittings

4) Split pin type and condition

7.6 Insulator Handling

a) Insulators must not be dragged on the ground.

b) Insulators must not be thrown on the ground or lie where inadvertent vehicle damage may occur.

c) Polymer insulators must not be bent or twisted.

d) A polymer insulator less than 2.5 m in length can be carried by one person holding the core at a central point.

e) A polymer insulator longer than 2.5 m in length must be carried by two persons, each holding the insulator 0.5 m from each end.

f) Bending must be kept to within a 30^0 angle from the horizontal when carrying long insulators.

g) For post insulators, slings must be placed around the end fittings for lifting and moving.

h) Under no circumstances must slings be attached to the shed areas of polymers.

7.7 Installation

a) Prior to raising the insulators must be inspected visually for damage.

b) For cap and pin units, the correct installation of cotter keys must be checked.

c) A ground sheet must be provided for the assembly of insulators and hardware.

d) Corona rings must be fitted correctly, according to the supplier's drawing and instruction sheets.

e) Sleeves can be used to prevent polymer shed or glass damage.

f) For polymer insulators, ropes or lifting lines must be attached around the metal end caps and not the shed areas. The ground line must be controlled by a ground-based lineman to prevent the insulator colliding with the structure.

g) For glass insulators, ropes and lifting lines must not be connected in between discs to prevent loading and damage to the split pins.

h) Working platforms, bucket trucks, tools etc., must not come into contact with the insulator during and after installation.

i) The climbing and walking on both insulators and corona rings are not permitted.

j) Insulators may not be used as anchoring points for pulleys, tools, safety belts and/or any other equipment.

k) No bending or twisting of the polymer insulator is permitted during attachment of hardware or during stringing. Do not try to rotate one end of a polymer insulator while the other end is fixed.

ESKOM COPYRIGHT PROTECTED

When downloaded from the WEB, this document is uncontrolled and the responsibility rests with the user to ensure it is in line with the authorized version on the WEB.

7.8 Post Installation

A final visual inspection on the installation should be done to determine:

a) Any signs of damage, including torsional loading.

b) Signs of bending or deflection.

c) Incorrectly applied insulators or hardware, including corona rings.

7.9 Marking, Labelling and Packaging

Where applicable, all marking, labelling and packaging must conform to the relevant standards.

7.10 Spares

Where spares-holding is a requirement, it must conform to the relevant standards.

8. Line Impedence Measurement

Line impedance measurements shall be carried out for all new transmission lines built. The measurement shall be carried out as per the latest revision of specification number 240-143268945, Transmission Line Impedance Measurement Specification. As per the requirements of the test, the measurements must be done **after construction completion but before the line is energised. One day must be set aside as a hold point on the project before commissioning.** Ideally, the test should be done after the line is inspected and any conductor, jumper and earth wire defects are repaired in order to not negatively affect the results of the test. The results of the test must be sent back to Lines Engineering Services, Eskom as soon as possible to verify. This is to allow for re-measurement, if there are any errors, before the line can be energised.

This activity must be performed by the **Contractor** however, if required, Lines Engineering Services can assist with this task (in such instance, the **Project manager** is to eliminate cost from BOQ).

For short lines; i.e. under 30 km; using differential protection, this test may not be required. The **Contractor** must confirm with Eskom Protection and Lines Engineering Services; via the **Project Manager**; before discarding this test on short lines.

9. As-Built Documentation

This section outlines the information that is required to be captured during and at the completion of construction of a new transmission line to form the as-built file. The **Contractor** must provide the as-built information in accordance with the format prescribed in the latest version of 240-72252925 (As-built document template) and outlined in **Annex E**. The template also specifies the standard format in which some of the data is required to be captured in.

The referenced template is also accompanied by an Excel spread sheet template which must be requested for from the **Design Engineer** for the **Contractor** to populate during construction.

10. Corrosion Protection

The corrosion protection system selection for all the various components on a transmission line is specified in the relevant line specification.

10.1 Hot Dip Galvansing

a) The **Contractor** shall include the number of the relevant standard i.e. SANS 121 (ISO 1461), in the instruction to the hot dip galvanizer.

b) Galvanising thickness requirements indicated in the relevant line specification shall be clearly communicated to the hot dip galvanizer.

ESKOM COPYRIGHT PROTECTED

When downloaded from the WEB, this document is uncontrolled and the responsibility rests with the user to ensure it is in line with the authorized version on the WEB.

c) The **Contractor**; before the material leave the hot dip galvanizer; should undertake acceptance inspections. Records of these inspections should be kept for auditing purposes and sent to the project manager for record keeping. The **Eskom quality inspector** should also be notified to verify the measurements obtained by the contractor. The number of articles that needs to be tested in a sample is specified in SANS 121. However, a lot in this instance is defined as a single delivery load and the control sample size is based on the number of each component type included in the delivery load. Each component classification forms its own control sample size within the lot e.g. 45x45x3, 50x50x4, etc.

d) The thickness of the hot dip galvanising on the components shall be inspected based on the thickness specified in the relevant line specification as well as making use of the table in Annex G

e) If the coating thickness on a control sample does not conform to the minimum requirements (stated above), twice the original number of articles shall be taken from the lot to be tested. If all the samples from the larger control sample passes, the complete component classification for that lot shall be accepted. If a sample from that larger control sample does not pass, the component classification for that lot shall not be accepted.

10.1.1 Tower Steel Members

a) The steel selected for manufacturing purposes of poles and lattice structures should be suitable for hot dip galvanizing. In general two steel types are acceptable namely “Aluminium Killed Steel” and “Silicon Killed Steel”. Table 1 in SANS 14713-2 gives a guidance on steel composition and typical coating characteristics that can be expected.

1) For Aluminium Killed Steel: **0.01 ≤ Silicon (Si) ≤ 0.03% and Phosphorous (P) < 0.015% maximum.**

2) For Silicon Killed Steel: 0**.15 ≤ Silicon (Si) ≤ 0.25% and Phosphorous (P) < 0.02% maximum.**

b) Certified mill test reports of the chemical and mechanical properties of the steel for the full quantity required for fabrication shall be obtained from the steel supplier. These reports shall be supplied to the hot dip galvanizer to ensure thickness requirements specified in design documentation can be achieved.

c) Pre-treatment requirements, if necessary to achieve specified thickness, shall be discussed between the **Contractor** and the hot dip galvanizer and clearly communicated to the **Employer**.

d) **Contractor** to provide **Employer** with a certificate from the galvaniser with regards to work done (avg thickness achieved, surface preparation, etc.) as per acceptance process above.

e) All material shall be free from excessive white rust and black staining when it is handed over to **Employer**. To assist in meeting this requirement, close attention shall be paid to the manner in which the material is stacked and stored at the galvaniser’s works and also during its subsequent handling until such time as it is handed over to **Employer**. Material which has been inspected at the galvaniser’s or manufacturer’s works and passed by appointed inspectors will still be liable to rejection if it has been found that excessive white rust has developed between the date of inspection and the date when the material is handed over to **Employer.** If the material is affected by excessive white rust the **Contractor** may clean it (using non-metallic brushes) before handing over and if thickness measurements of galvanised coating still meets the requirements specified in the appropriate tables in Annex G, the material will be accepted.

f) The preferred method of repair is by zinc metal thermal spraying, but due to the remoteness of sites and the unavailability of metals spraying equipment, repairs by a zinc-rich epoxy paint (of at least 100 µm or more than specified galvanising thickness) with at least 82% zinc in the dry film can be used. For convenience of application and accurate mixing of ingredients that make up the zinc rich epoxy, products in a “squish pack” form endorsed by the Hot Dip Galvanising Association (HDGASA) can be used.

ESKOM COPYRIGHT PROTECTED

When downloaded from the WEB, this document is uncontrolled and the responsibility rests with the user to ensure it is in line with the authorized version on the WEB.

g) These repairs should be limited to small coating defects not larger than 25mm diameter. Surface preparation is key and the affected area should be cleaned of contaminants (grease, oil, etc.) by means of approved solvents. The area should then be abraded with abrasive paper (80 grit roughness) or with a stainless steel brush. Dust and debris should be removed, and the area is adequate for repair using an approved product.

10.1.2 Bolts, Nuts and Washers

a) Bolts, nuts and washers shall be hot dip galvanised in compliance with the latest revision of SANS 10684.

b) As a general rule when hot dip galvanizing a threaded component or ISO metric fastener, the galvanizing of one thread either internal or external requires an extra clearance of four times the coating thickness. In practice it is normal for standard bolts from stock to be fully galvanized, but for nuts to be galvanized as blanks and then tapped up to 0.38-0.42 mm oversize with the threads lightly oiled. When assembled the nut thread is protected by contact with the coating on the bolt. The SANS 1700 standards on bolts and nuts do not make provision for this and hence all galvanized bolts and nuts should be manufactured according to Annex A.

c) Hot dip galvanising on fasteners that is applied using the centrifuged method should have a thickness specified in the relevant table in Annex G.

d) Further to the requirements as stated above, if protection of bolts, nuts and washers by means of an alternative metallic coating is specified in the relevant line specification, then additional clearances on the nut may be required as both bolt and nut threads will remain coated to the required coating thickness and easy fitment of nut and bolt must still be retained.

e) When use is made of a thermal zinc diffusion coating process (SANS 1471-3) the minimum coating thickness that will be achieved is 70 µm and the thread cut should accommodate this.

f) When use is made of a metallic electroplating process (ISO 4042) where the coating is specially developed for fasteners and hardware exposed to marine conditions, the minimum coating thickness that will be achieved is 35 µm and the thread cut should accommodate this.

10.2 Organic Coating System

If the design of a line calls for added corrosion protection in the form of an organic coating on top of the hot dip galvanised steel, the following shall be taken into consideration.

a) The **Contractor** is responsible to use the requirements provided in the relevant line specification and submit it to a paint supplier to be used for each activity specified.

b) The **Contractor** will ensure that all the necessary product documentation requested in the requirements section in the relevant design documentation are sufficient. The **Contractor** will submit these documents to the **Employer** for review and record keeping purposes.

c) The **Contractor** should follow the supplier application instructions on the system to ensure the best possible outcome. Coating thickness will be measured after application following supplier instructions.

d) **Employer** will require the **Contractor** to supply a guarantee certificate at the end of a project for the paint supplier, for each specific system supplied, including the product name, transmission line name, contractor name and guarantee period.

e) If the **Contractor** cannot provide the **Employer** with a certificate with the initial durability requirements with stated reason. The contractor should be held liable for maintenance on the system.

f) It is preferred that the coating system should be applied at the galvanising yard, alternatively it can be applied on site with a clear indication from the supplier in writing how it would affect the guarantee.

g) Care should be taken when transporting components to site that were coated at the galvanizing yard and suitable protection to sections should be provided.

ESKOM COPYRIGHT PROTECTED

When downloaded from the WEB, this document is uncontrolled and the responsibility rests with the user to ensure it is in line with the authorized version on the WEB.

h) Except where alternative application methods are mentioned, all coatings shall be applied by means of brush when on site.

i) Painting is a skilled process and shall only be carried out by capable and experienced personnel, as well as with equipment suitably designed for application of the coating.

j) All surfaces shall be inspected prior to coating, to ensure that the standard of cleaning complies with the criteria as stipulated in the suppliers surface preparation procedure.

11. Photographic and Video Records

Photographs shall be taken on all critical stages of the line construction. Where applicable, videos must be taken of the rigging and stringing activities.

12. Authorization

This document has been seen and accepted by Lines Engineering Services engineers and management.

Name an Surname	Designation
Sibonelo Nzama	Civil & Structural Manager Lines Engineering Services
Lebo Maphumulo	Corporate Specialist Lines Engineering Services

13. Revisions

Date	Rev	Compiler	Remarks
July 2021	2	D Dukhan	Finalisation of document Comments included from PDP, LES and Contractors
Nov2014	1	D Dukhan/W Combrink	Include majority of comments

14. Development team

Name and Surname	Designation
Riaz Vajeth	Technical and Strategic Guidance
Dan Dukhan	Technical and Strategic Guidance
Sibonelo Nzama	Technical and Strategic Guidance
Bertie Jacobs	Technical and Strategic Guidance
Mikeshen Gounden	Technical and Strategic Guidance
Siyabonga Dubazana	Technical and Strategic Guidance
Willem Combrinck	Foundation Specialist
Shaina Bisson Dayal	Civil Engineer
Pierre Marais	Technical and Strategic Guidance
De Wet Visser	Electrical Engineer
Sanjeev Hirachund	Line Survey Specialist
Jose Diez Serrano	Structural Specialist
Suren Natesan	Technical and Strategic Guidance

ESKOM COPYRIGHT PROTECTED

When downloaded from the WEB, this document is uncontrolled and the responsibility rests with the user to ensure it is in line with the authorized version on the WEB.

Name and Surname	Designation
Loris Manferdini	Technical and Strategic Guidance
Alicia Simbudayal	Technical and Strategic Guidance
Ockert Fourie	Technical and Strategic Guidance
Kiresh Singh	Technical and Strategic Guidance
Bharat Haridass	Technical and Strategic Guidance
Shawn Ramadhin	Technical and Strategic Guidance
Ndangi Muthadi	Technical and Strategic Guidance
Chandresh Juggernath	Technical and Strategic Guidance
Prashant Mathurdas	Technical and Strategic Guidance
Lebo Maphumulo	Document Reviewer

15. Acknowledgements

Eskom Line Engineering staff, PDD ,PDP, TAP and Distribution staff have contributed. Also all Eskom staff and contractor staff who have contributed is acknowledged.

ESKOM COPYRIGHT PROTECTED

When downloaded from the WEB, this document is uncontrolled and the responsibility rests with the user to ensure it is in line with the authorized version on the WEB.

Annex A – Tolerances

1. Steel tolerances

Table A.1: Summary of main tolerances for the manufacturing of angles and plates generally used in tower fabrication

OPERATION	ANGLES		PLATES / FLATS	
Straightness (after manufacturing)	Length of member = L (mm) Leg length = h (mm) For h ≤ 150 : Straightness = 0.4% L For 150 < h ≤ 200 : Straightness = 0.2% L			
Dimensions	**Leg length = h (mm)**	**Permissible Variation (mm)**	**Flats**	
			Width = b (mm)	**Permissible Variation (mm)**
	h ≤ 50	-1.0 to +1.0		
	50 < h ≤ 100	-1.5 to +1.5		
	100 < h ≤ 150	-3.0 to +3.0	b ≤ 35	0.5 to +0.75
	150 < h ≤ 200	-3.0 to +3.0	35 < b ≤ 75	-0.8 to 1.0
			75 < b ≤ 100	-1.0 to +1.5
			100 < b ≤ 120	-2.0 to +2.5
			Thickness = t	
			t < 20	-0.5 to +0.5
			20 ≤ t ≤ 40	-1.0 to +1.0
			t > 40	-1.5 to +1.5
			Plates	
			Nominal Thickness (t) (mm)	**Permissible Variation (mm)**
				-0.3 to +0.9
			4.5 ≤ t < 5	-0.3 to +1.2
			5 ≤ t < 8	-0.3 to +1.4
			8 ≤ t < 15	-0.3 to +1.6
			15 ≤ t < 25	-0.3 to +1.9
Punching of holes	Allowed up to ≤ 18 mm thick for full size diameter of hole. More than 18 mm thick then sub-punch and ream or drill to full size. Diameter of final hole = Bolt dia + 1.5mm. Tolerance of final hole dia = +0.5mm. See further tolerance requirements in Figure 10 and 11 below.		Allowed up to ≤ 18 mm thick for full size diameter of hole. More than 18 mm thick then sub-punch and ream or drill to full size. Diameter of final hole = Bolt dia + 1.5mm. Tolerance of final hole dia = +0.5mm. See further tolerance requirements in Figure 10 and 11 below.	
OPERATION	**ANGLES**		**PLATES / FLATS**	
Drilling of holes	Diameter of final hole = Bolt dia + 1.5mm. Tolerance of final hole dia = +0.5mm. See further tolerance requirements in Figure 10 and 11 below.		Diameter of final hole = Bolt dia + 1.5mm. Tolerance of final hole dia = +0.5mm. See further tolerance requirements in Figure 10 and 11 below.	

ESKOM COPYRIGHT PROTECTED

When downloaded from the WEB, this document is uncontrolled and the responsibility rests with the user to ensure it is in line with the authorized version on the WEB.

OPERATION	ANGLES	PLATES / FLATS
Bending Angle	Only for open and closed flanges as per relevant tower drawing(s). No cold bending allowed.	Cold Bending Plate thickness = t (mm) t ≤ 12 : Max angle = 14° 12 < t < 22 : Max angle = 7°
	Tolerance on final bending angle = ±1°	Hot Bending Plate thickness = t (mm) For t > 22 mm Tolerance on final bending angle = ±1°
Backmark	Allowable offset from backmark = ±1 mm.	Allowable offset from backmark = ±1 mm.

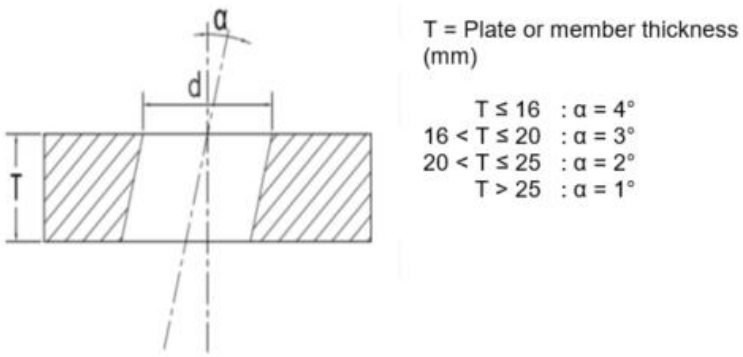

Figure A.1: Tolerance requirement on holes (a)

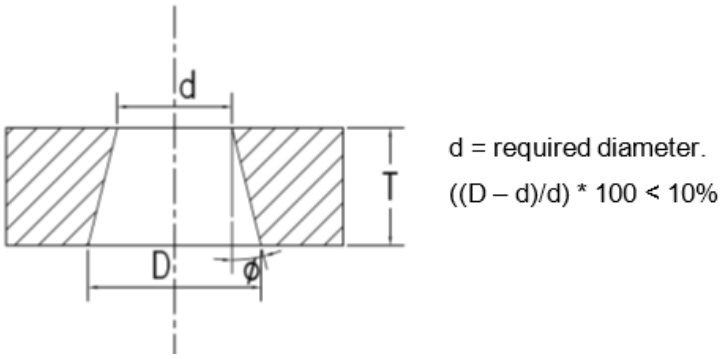

Figure A.2: Tolerance requirement on holes (b)

2. Bolt tolerances

Inspecting of the bolts on site by measurement of the outside diameter of the thread will clearly indicate if bolts were undercut prior to hot dip galvanizing. The following table is an extract from the SANS 1556-1: ISO Metric screw threads, with the addition of the galvanizing thickness on bolts and oversize tapping of nuts, and can be used on site to measure pitch diameters to check if bolts are cut undersize.

ESKOM COPYRIGHT PROTECTED

When downloaded from the WEB, this document is uncontrolled and the responsibility rests with the user to ensure it is in line with the authorized version on the WEB.

Table A.2: Details of Bolt and Nut Tolerances

Bolts (All dimensions in mm)									**With Hot dip galvanizing**	
d/D	Toll	Pitch	M	es	Td	d_max	d_min	Galv	d_max	d_min
M16	6g	2	16	0.038	0.280	15.962	15.682	0.045	16.052	15.772
M18	6g	2.5	18	0.042	0.335	17.958	17.623	0.045	18.048	17.713
M20	6g	2.5	20	0.042	0.335	19.958	19.623	0.055	20.068	19.733
M22	6g	2.5	22	0.042	0.335	21.958	21.623	0.055	22.068	21.733
M24	6g	3	24	0.048	0.375	23.952	23.577	0.055	24.062	23.687
M30	6g	3.5	30	0.053	0.425	29.947	29.522	0.055	30.057	29.632
M36	6g	4	36	0.060	0.475	35.940	35.465	0.055	36.050	35.575
Nuts (All dimensions in mm)									**Oversize Thread**	
d/D	Toll	Pitch	M	EI	Td	D_1	D1_min	D1_max	D1_min	D1_max
M16	6H	2	16	0.000	0.375	13.835	13.835	14.210	14.255	14.630
M18	6H	2.5	18	0.000	0.450	15.294	15.294	15.744	15.714	16.164
M20	6H	2.5	20	0.000	0.450	17.294	17.294	17.744	17.824	18.274
M22	6H	2.5	22	0.000	0.450	19.294	19.294	19.744	19.824	20.274
M24	6H	3	24	0.000	0.500	20.753	20.753	21.253	21.393	21.893
M30	6H	3.5	30	0.000	0.560	26.211	26.211	26.771	26.961	27.521
M36	6H	4	36	0.000	0.600	31.670	31.670	32.270	32.530	33.130

ESKOM COPYRIGHT PROTECTED

When downloaded from the WEB, this document is uncontrolled and the responsibility rests with the user to ensure it is in line with the authorized version on the WEB.

Annex B – Details of fall Arrest Anchor

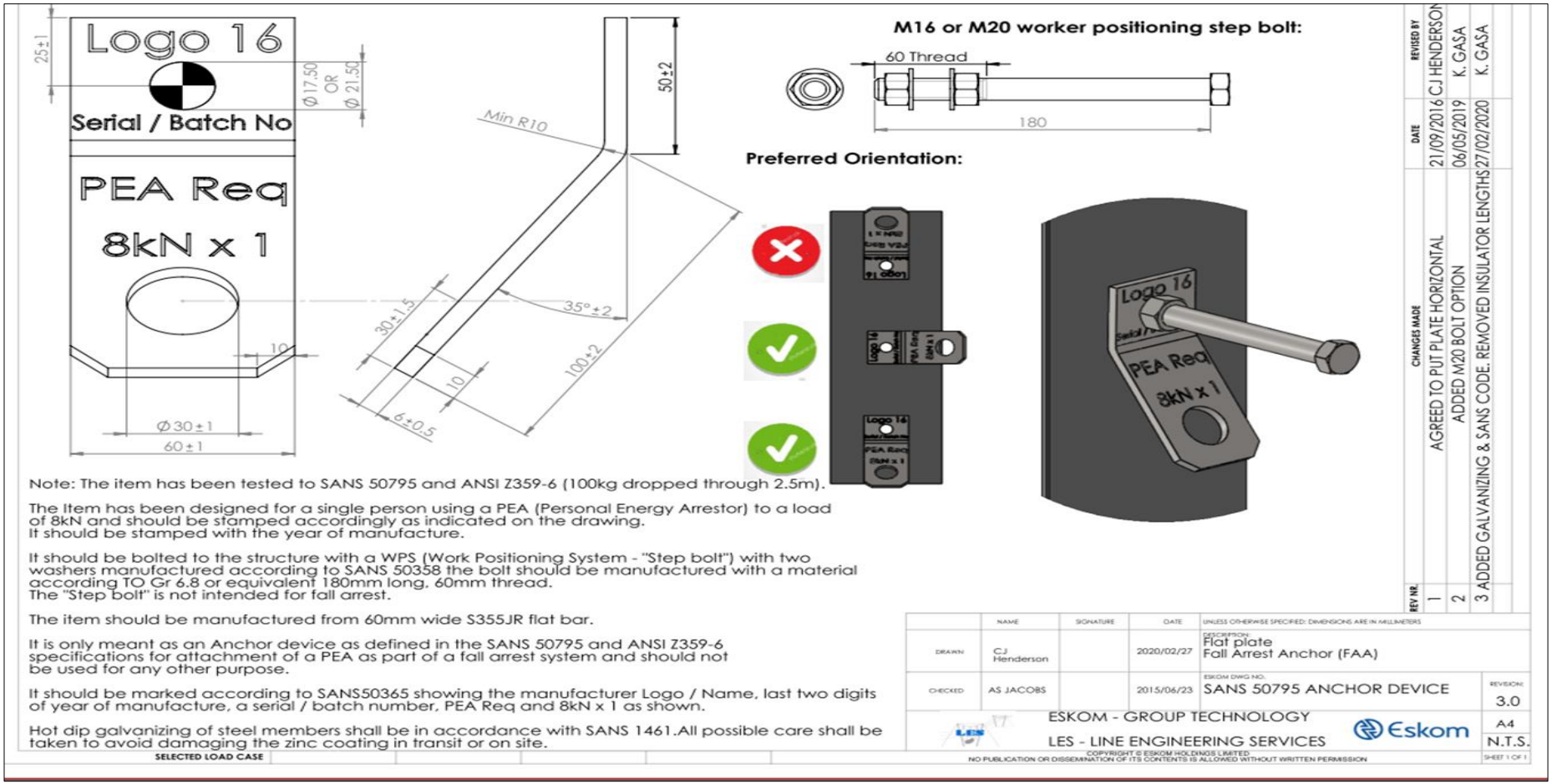

Figure B.1: Fall Arrest Anchor Details

ESKOM COPYRIGHT PROTECTED

When downloaded from the WEB, this document is uncontrolled and the responsibility rests with the user to ensure it is in line with the authorized version on the WEB.

Annex C – Electrical Safety Earthing during Construction

Introduction to Safety Earthing

It is the responsibility of the **Contractor** to ensure compliance with all the requirements contained in the ORHVS (Operating Regulations for High Voltage Systems) as well as in the OHSA when working on the power system. The **Contractor** needs to ensure that all staff is adequately trained and authorized to the requirements contained in the ORHVS as well as the OHSA.

1. Close Proximity to Live Conductors or Apparatus (Ref Table C.1)

If work is of such a nature that a person, machine or object could inadvertently encroach on the minimum safe working clearance then this is interpreted as close proximity.

The following precautions shall be taken prior to the commencement of work that could inadvertently encroach on the minimum safe working clearance to a live line or apparatus:

a) The auto-reclose features on all breakers controlling the supply to the live line shall be made inoperative.

b) The relevant prohibitory signs shall be displayed on the control panels. Where the auto-reclose function of a line is made inoperative via supervisory, it will not be necessary to apply a prohibitory sign to the control panel. If the auto-reclose is rendered inoperative manually, a prohibitory sign shall be applied. Tags shall be displayed on all Supervisory Control and Data Acquisition systems irrespective of the method used to render the auto-reclose inoperative

c) The live line or apparatus shall be handed over to the appointed operator responsible for supervising the work

d) The control officer shall attach the names of the appointed operators to the apparatus on the operating diagram.

e) No breaker controlling the supply to the apparatus shall be reclosed after a breaker trip until the control officer has confirmed with the appointed operators, to whom the live line has been handed over, that it is safe to do so.

f) All work shall be supervised by an appointed operator who shall ensure that minimum safe working clearances are maintained at all times.

When the minimum safe working clearance between persons, machinery or objects and live apparatus or lines cannot be maintained such live apparatus or lines shall be isolated and earthed at a safety panel.

Table C.1: Minimum Safe Working Clearances

SAFE WORKING CLEARANCE				
AC VOLTAGES	**MINIMUM CLEARANCE**		**DC VOLTAGES**	**MINIMUM CLEARANCE**
765kV	6.0m		600kV	5.0m
400kV	4.0m		450kV	4.0m
275kV	3.0m		300kV	3.0m
220kV	2.5m		150kV	2.0m
132kV	2.0m			
88kV	1.5m			
66kV	1.3m			
1kV-44kV	1.0m			

ESKOM COPYRIGHT PROTECTED

When downloaded from the WEB, this document is uncontrolled and the responsibility rests with the user to ensure it is in line with the authorized version on the WEB.

2. Stringing and Regulating

When stringing and regulating conductors close to a parallel energized line(s), and when transferring conductor onto suspension and strain hardware and when fitting jumpers at strain towers, there is a real risk for workers to get injured or killed as a result of induced voltage and current.

This risk can be avoided by applying safety earthing in two levels, namely 1 set of working earths on either side of the work sites, and an additional set of earth's further away (master earth). It is also assumed that proper earthing tools are used, and that earthing will always be applied and be removed using an insulated earth stick.

The main aim of the earthing described above is to create a preferred path for induced energy (described in engineering terms as electrostatic and electromagnetic induction which leads to measurable voltage and current levels). It is further implied that the worker should never become part of the electrical circuit through the rigorous application of the working earths.

Note that the earthing system that is designed and intended to be part of the operation of the line during its lifecycle is to be seen as a separate earthing system.

Internationally, line construction contractors are required to apply the safety earthing principles as laid down in in the following standards, including the adherence to earthing equipment specifications:

- IEC 61328-2017 : Live Working - Guidelines For The Installation Of Transmission Line Conductors And Earthwires - Stringing Equipment And Accessory Items,
- IEC 61230-2008 **:** Live working - Portable equipment for earthing or earthing and short-circuiting
- IEEE STD 524- 2016 : IEEE Guide for the Installation of Overhead Transmission Line Conductors
- IEEE STD 524a- 1993 : Guide to Grounding During the Installation of Overhead Transmission Line Conductors

Of particular interest is the IEEE Standard 524 which explains how safety earthing practices should be applied during the installation of overhead conductors and how the **Contractor** should proceed to do the various activities from the stringing phase until the conductor installation work is finished.

For the application of working earths at least a 20 mm squared copper cable must be used or an aluminium equivalent. For the application of control earths at least a 70 mm squared copper cable must be used or an aluminium equivalent.

ESKOM COPYRIGHT PROTECTED

When downloaded from the WEB, this document is uncontrolled and the responsibility rests with the user to ensure it is in line with the authorized version on the WEB.

Figure C.1: Example of insulated earth sticks

Induced Voltages and Currents that pose a risk

There are several potentially hazardous conditions routinely found on equipment connected to the electrical network including earthing conductors and interconnected structures. These hazardous conditions can cause a fatal electric shock and include:

- Induced voltages from electromagnetic induction and capacitance coupling
- Transient voltages from lightning and some high voltage (HV) switching surges
- Earth potential rise (EPR) and the resulting step and touch potential

While these conditions are more likely to be found during a fault somewhere on the electrical network or during storm conditions, they can also occur during normal working conditions.

Factors affecting the level of induced voltage are:

- Strength of the electromagnetic field being produced around the energised conductors
- Distance that the lines/cables runs parallel to each other, and
- Proximity (closeness) of the lines/cables to each other.

The value of an **Electrostatic** induced voltage depends on the voltage of the inducing conductor/line (energised apparatus) or changes in voltage due to switching or faults.

ESKOM COPYRIGHT PROTECTED

When downloaded from the WEB, this document is uncontrolled and the responsibility rests with the user to ensure it is in line with the authorized version on the WEB.

The value of an **Electromagnetic** induced voltage depends on the:

- Distance that new or isolated aerial conductors run parallel to an inducing conductor/line that can considerably increase the amount of induced voltage.
- Separation distance between the inducing conductor/line and the new or isolated apparatus.
- Amount of current flowing in the inducing conductor/line due to load or faults.

In some cases, an inducing conductor/line crossing at right angles to a new or isolated line can create induced voltages.

Electrical apparatus such as transformers and cables, including the associated metalwork, which is close to live HV apparatus, can have a voltage induced into it.

The value of an induced voltage will influence the number of working earths required and the proximity of the working earths to a person's working position.

Job Risk Assessments (JRA) must take into consideration the effects of induced voltages for all tasks that involve working on new or isolated electrical apparatus.

If either the master earths or the working earths cannot be connected to a tower's steel (to use the tower's earthing system), it is specified that rod earths be driven into the ground and tested to see that a low enough resistance is achieved for it to be effective. This is an area where contractors should be strictly monitored to make sure that the correct technique and equipment is used to verify the effectiveness of drive rod temporary earth electrodes. Although it will not always be possible to achieve low ohm values, it is suggested that a value below 25 ohms be achieved. If this value is not achieved by the first driven rod, it implies that more rods be driven in a crow's foot arrangement and interconnected with leads.

The two figures C.2 and C.3 below demonstrate the capacitive coupling and magnetic coupling situations. In practice, a mix of the two coupling mechanisms will be present. The magnetic coupling mechanism can be more dangerous especially if the workers on site do not understand how it actually manifests itself. A single earth applied to a conductor which is subjected to magnetic coupling phenomena is a death-trap waiting for the worker to touch it to complete and set the circuit up to conduct electrical current.

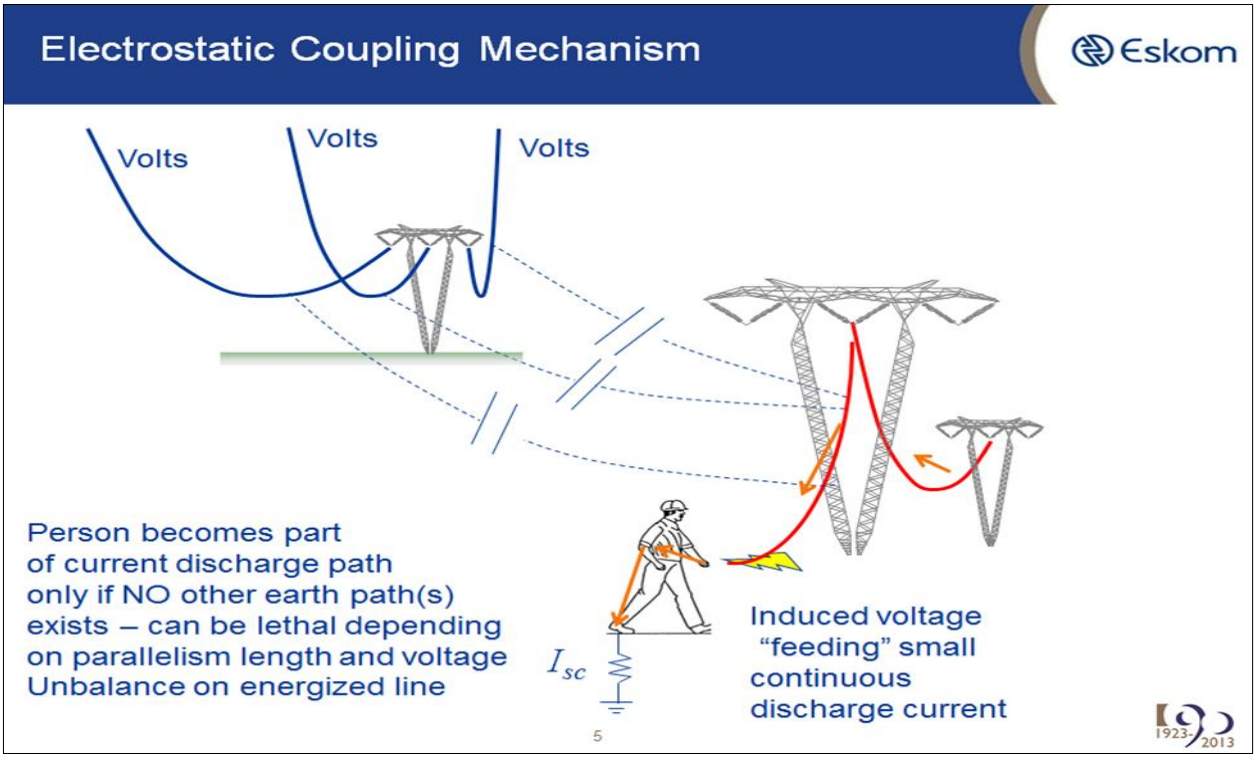

Figure C.2: Electrostatic Coupling Mechanism

ESKOM COPYRIGHT PROTECTED

When downloaded from the WEB, this document is uncontrolled and the responsibility rests with the user to ensure it is in line with the authorized version on the WEB.

With a single earth in place, the electrostatic induction (which would be present if energized parallel lines are energized but not carrying current) can be dealt with quite effectively using only 1 earth (instead of the worker providing that path to earth).

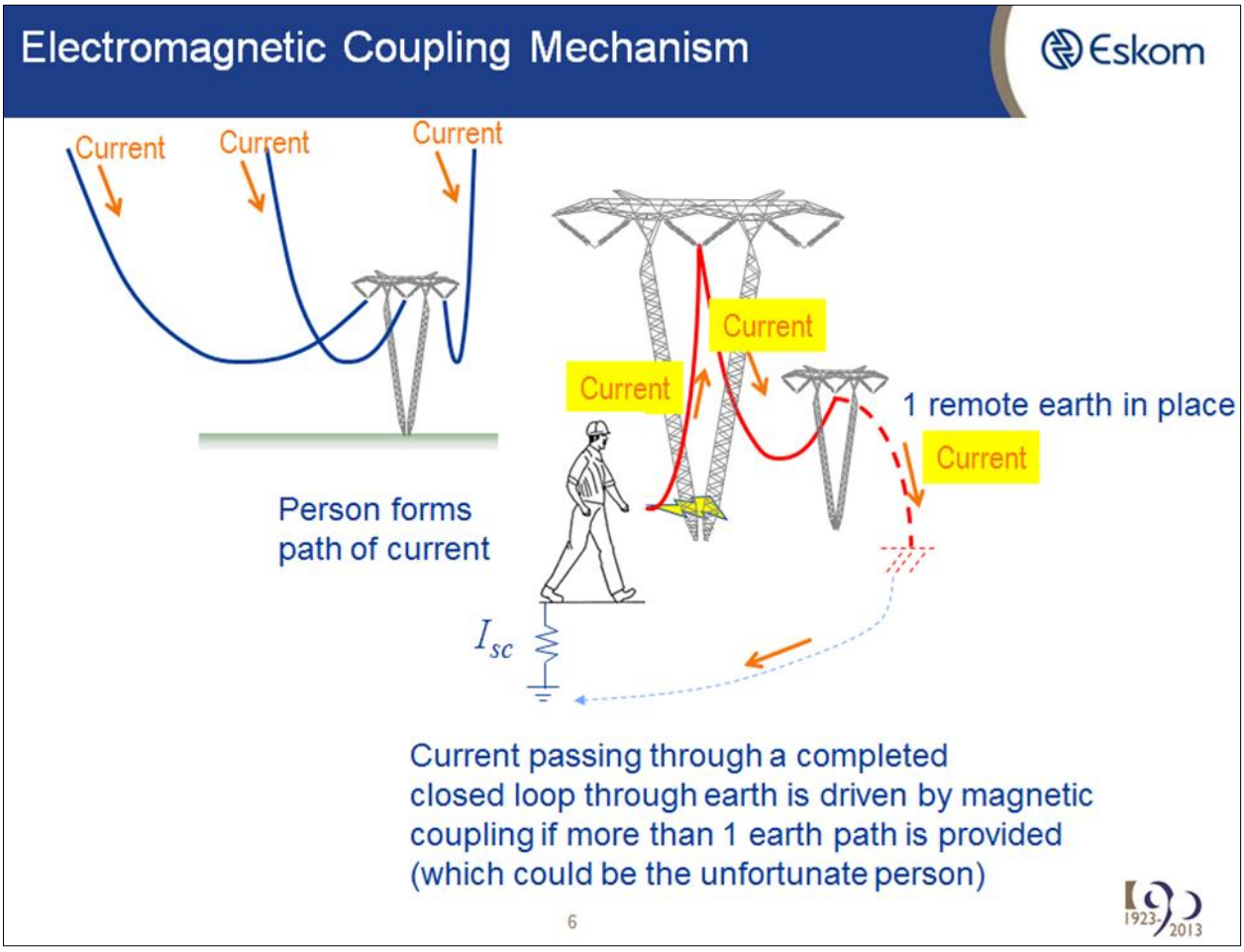

Figure C.3: Electromagnetic Coupling Mechanism

When there is no voltage on the parallel energized lines but if they carry current, which is admittedly an unlikely scenario but used here for explanatory purposes, the worker is facing a lower risk when no earths are applied than when 1 earth is applied. If only 1 earth is in place, the worker becomes the second earth which completes the electrical circuit for current to be conducted.

As soon as more than 2 earths are applied, the chances of the worker becoming a preferred path for electrical current is reduced. When two working earths are applied on both sides of the work site, and two master earths further away, redundancy in the temporary earthing system is provided and the risk to the worker is reduced to a very low level.

ESKOM COPYRIGHT PROTECTED

When downloaded from the WEB, this document is uncontrolled and the responsibility rests with the user to ensure it is in line with the authorized version on the WEB.

Avoiding induced voltage and current effects during construction activities

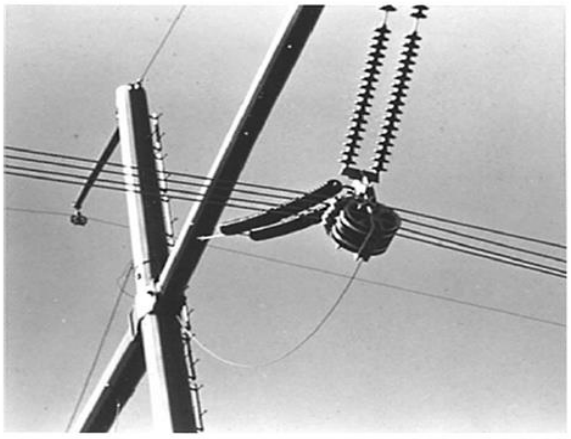

a) Application of traveler ground

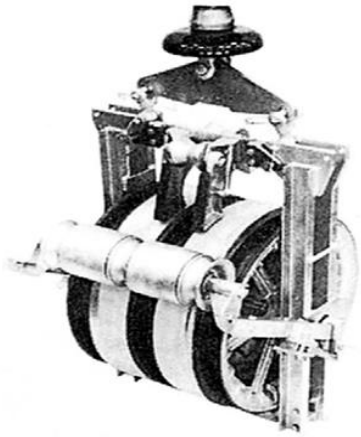

b) Individual traveler ground

The use of running blocks with a traveller ground is suggested by the IEEE 524 standard and provides a very good security system against accidental electrocution when transferring conductors from running blocks onto insulator assemblies. These devices also provide an additional remote earth connection at each suspension tower.

In summary, the following activities and procedures are potentially risky in terms of steady state (50Hz) induced electrocution:

- Stringing a new line close to parallel energized lines or when crossing them
- Regulating and fitting of dead-ends, and transferring conductors from running blocks on suspension towers to the insulator hardware
- Fitting of jumpers on strain towers
- Dismantling of conductor from an old line that runs in parallel or crossing existing energized lines

Transient coupling, from lightning or switching impulses, although far less likely to occur at a critical moment in time, will also be limited to a large extent if the 50Hz steady state induction risk is properly eliminated.

As shown, Figure C.4 is a suggested retro-fit to convert standard running blocks so that traveler grounds are added.

ESKOM COPYRIGHT PROTECTED

When downloaded from the WEB, this document is uncontrolled and the responsibility rests with the user to ensure it is in line with the authorized version on the WEB.

3. Handling of Conductive Tools

Tools will develop a dangerous potential when being hoisted in a high electric field. Tools must be discharged before any worker makes contact with it.

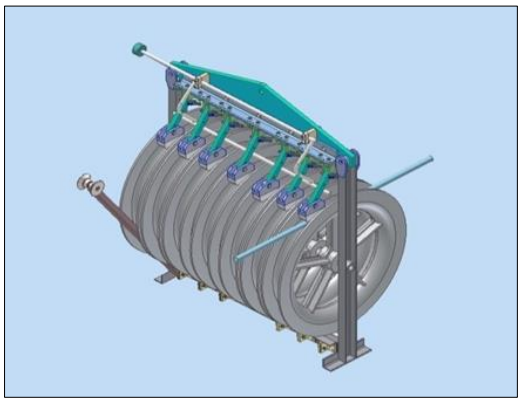

Figure C.4: Conversion of Standard Running Blocks

4. Crossings

Before work commences:

- The installation being crossed must be inspected to ensure that it conforms to design standards and that no existing clearances (phase-phase, phase-earth, phase-stay wires) are compromised.
- Arc should be switched off.

It is of particular importance when working close to energized infrastructure that the minimum safe approach distances are maintained at all times. It should also be noted that the minimum safe approach distance only ensures that a flashover will not occur. It does not stop induction from occurring - be it electrostatic or electromagnetic.

It is important to note when crossing live infrastructure that there is a huge risk that the installation may become live in the event of mechanical failure. This will lead to dangerous step, touch potentials and transferred potentials which can be partially mitigated by installing an earthmat at the site location.

ESKOM COPYRIGHT PROTECTED

When downloaded from the WEB, this document is uncontrolled and the responsibility rests with the user to ensure it is in line with the authorized version on the WEB.

Annex D – Foundation Nominations

IDENTIFICATION AND CLASSIFICATION OF SOILS

PURPOSE: To identify strength, compressibility and permeability characteristics.
CRITERIA: MOISTURE, COLOUR, CONSISTENCY, STRUCTURE, SOIL TYPE, ORIGIN (MCCSSO)
SOIL PROFILE: A soil profile is composed of 4 categories of material. **1) Rock-** weathered to fresh Cu= 700KPa; **2) Residual Soil** – Insitu decomposed rock; **3) Transported Soil** – in waterborne or windblown deposits; **4) Pedogenic Material** – cemented soils eg. Ferricrete.
Frequently the profile displays a 'pebble marker' located between transported and residual soils.
Note: Not all four soil categories are necessarily developed on any particular site.

Soil Moisture

1. Dry (powdery): } Below optimum moisture content for compaction.
2. Slightly Moist: }
3. Moist: Near optimum moisture content for compaction.
4. Very Moist: } Above optimum moisture content for compaction
5. Wet: } Comes from below the water table.

NOTES:
1) **Consistency is largely dependent on the moisture content.**
2) **Sand with a moisture content of 5-10% will appear wet, while clay at the same moisture content may be dry or slightly moist.**
3) **Clays are usually saturated or partially saturated. Only clays from close to the surfaces will be dry or slightly moist in which case their structure will frequently be. micro-shattered or shattered.**

Soil Colour

Use a Burland Colour Disc
Describe the soil colour in two ways
a) Take a small sample and mix it with water to form a creamy paste in the palm of your hand.
b) Describe the colour of the natural soil "in profile".
Use terms such as mottled (blotched if mottling is large scale), speckled, banded or streaked.
NOTES:
1. **Colour is more an aid to identification than of geotechnical significance**
2. **Reference should be made in the soils report to the colour standard used.**
3. **Be consistent.**
4. **Colour zoning on a particular site and in a particular weather rock profile may reflect the degree of weathering.**

Soil Structure

When referring to cohesive soils indicates presence or absence and nature of joints. When referring to granular soils, describes bedding thickness and type and grain characteristics.

Cohesive Soils
Intact: No Joint or fissures.
Fissured: Closed joint frequently stained with iron or manganese oxides.
Slickensided: Fissures are polished or glossy and may be striated. Indicates movement.
Shattered: Open fissures or joints which may or may not be slickensided. Soil fragments are usually stiff to very stiff and do not easily absorb water. Often associated with having soils.
Micro-Shattered: Intact fragments are very small and soil appears to be granular.

Stratified laminated foliated. Various terms for bedding.

Granular Soils
Beddings: Thick or thin, give dimensions and indicate presence of cross-bedding.
Particle Shapes: Rounded, sub-rounded, sub-angular, angular.
Surface Features: Polished, pitted, striated.
Compostion: Cemented. Nodular, concretions etc.

Soil Type

A soil may be composed of the types mentioned below leading to sub- classifications such as clayey sand or sandy clay depending on relative proportions.

Cohesive Soils:
Clay - Particle size <0.002mm, Soapy or grassy feel when mixed with water. If mixed with water in a glass, remains in suspension for longer than 1 hour. Can be rolled into threads approximately 2.5mm thick. No feel of grittiness when placed between tongue and teeth.
Silt - Particles 0.002 – 0.05mm. Graininess barely felt when rubbed with water in the palm of the hand but can be felt on the teeth. Settles from suspension in a glass of water in 15 to 50 minutes. Exhibits dilatancy. If a saucer with the wet paste in it is gently tapped, surface will appear shiny. LL <35%

Granular Soils:
Sand - Particle size 0.05 – 2.0mm; fine 0.06 – 0.2mm, medium 0.2 – 0.6mm or coarse 0.6 – 2.0mm. Particles visible to the naked eye. Settles from suspension in 15 to 60 seconds.
Gravel - Particle size 2.0 – 200mm; fine 2.0 - 12mm, medium 12- 50mm or coarse 50 – 200mm. Composition and shape of particles is important as is proportion and composition of matrix.
Boulders - Rock fragments larger than 200mm. Describe as for gravel.
Granular Soils may be well, poorly or uniformly graded.

Cemented Soils:
Ferricrete, Silcrete. Calcrete frequently incorrectly called 'laterite'.

Soil Consistency

GRANULAR SOILS	θ	SPT 'N'	Dry γ = KN/m³	Dutch Probe Point Res	Field Identification
1.Very Loose	25 - 30	0 – 4	<14,2	< 1,3 MPa	Almost no resistance to shoveling. Crumbles.
2. Loose	27 – 35	4 – 10	14,2 – 15,7	1,9 – 3,8	12 mm Ø bar easily pushed in by hand. Small resistance to shoveling and geological pick.
3. Medium Dense	30 - 40	10 – 30	15,7 – 17,2	3,8 – 8,6	Easy penetration by 12mm Ø bar using 2 kg hammer. Considerable resistance to shoveling. Considerable resistance to penetration by geological pick.
4. Dense	35 – 43	30 – 50	17,2 – 18,6	8,6 - 12,5	Considerable resistance to penetration to 300mm by using 12mm Ø bar driven with 2 kg hammer. Very high resistance to penetration by geological pick. Hand pick required for excavation.
5. Very Dense	40 – 45	50 – 80	>0.6	>12,5	Penetration by 12mm Ø bar only up to 25mm using 2 kg hammer. Power tools required for excavation.
6. Refusal		>80			

COHESIVE SOILS	SPT 'N'	Natural γ = KN/m³	qu = KN/m²	Field Identification
1. Very Soft	0 – 2	15,1	<35	Easily moulded by fingers. Pick easily pushed in up to the shaft of the handle. Distinct heel mark left on exposed surface.
2. Soft	2 – 4	16,7	35 – 75	Easily penetrated by the thumb. Sharp end of pick pushed in 30 to 40 mm. Moulded by strong finger pressure. Faint heel marks left on the exposed surface.
3. Firm	4 – 8	18,0	75 – 150	Indented by thumb effort. Pick pushed in by only 10mm very difficult to mould with fingers. Slight penetration by spade.
4. Stiff	8 – 15	19,6	150 – 300	Penetration by thumb nail. Slight indentation by pick. Cannot be moulded by fingers. Pick required for excavation.
5. Very Stiff	15 – 40	21,2	>303	Indentation by thumbnail with difficulty. Slight indentation produced by blow with pick. Requires power tools for excavation.
6. Hard	>40			(Usually a dry or a slightly moist very stiff clay)

Notes: 1) With regard to the strength of cohesive soils, the soil structure is very important as is the possibility of moisture content changes.
2) qu = unconfined compressive strength = Z Cu

Soil Origin

Transported Soils:
Talus - Unsorted angular gravel and boulders that have fallen from a rock outcrop. "Coarse colluvium ", occurs on hillsides and below cliffs.
Hillwash – Mixed soils derived from weathering of rocks making hills. Found on hillslopes and sides of valleys below hills, "Fine Colluvium".
Alluvial or Gully Wash – Frequently gravels and sands with cohesive strats. Found in valleys and deposited during floods.
Lacustrine – Mixed soils deposited at river mouth into lakes or dams.
Estuarine – Mixed soils occurring in estuaries.
Aeolian – Usually sands, deposited by wind.
Littoral – Beach sediments.
Except for colluvium most granular transported soils have rounded particles.

Residual Soils:
Derived from in-situ weathering of bedrock. Depending on degree of weathering may retain the parent fabric and texture from which the parent rock may be identified. Grade downwards to "rock".

Pedogenic materials may develop in both transported and residual soils.

Figure D.1: MCCSSO: Soils Identification

ESKOM COPYRIGHT PROTECTED

When downloaded from the WEB, this document is uncontrolled and the responsibility rests with the user to ensure it is in line with the authorized version on the WEB.

Eskom

Power Delivery Engineering
Line Engineering Services

Unique Identifier: 240-87292251

Contractor's Soil Profile Sheet

NO CONSESSION SHALL BE GRANTED BY ESKOM WITH A VIEW TO REDUCE THE NUMBER OF TEST PITS AS ILLUSTRATED BELOW.

Contractor:	
Project:	
Date Tested:	
Test Pit No.	
Tower Type	
NOMINATION	

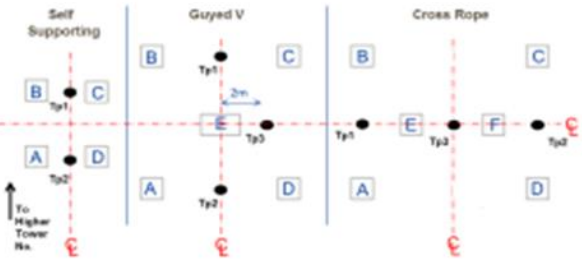

Tick the applicable box above and indicate the test pit position.

Pit Depth (mm)	Layer Thickness (mm)	**General Description** (MCCSSO) Moisture, Colour, Consistency, Structure, Soil type, Origin
0		
1000		
2000		
3000		
3600		
Profile Notes:		1.
		2.
		3.

Soil Profile done by:	
Name of Registered Person:	
Institute: (Eg. ECSA/SAIEG)	
Registration Number:	

Insert Photograph of Soil Test Pit profile HERE

NB:

(Photograph should be of good quality of at least 5megapixels, and must clearly illustrate the entire depth of the profile with the following test pit information on a board, above the soil test pit)

Test Pit Info:

- Tower Type and Number
- Test pit number and tower leg letter

NB: The results of this soil profile must be captured in the Eskom's Contractor's Soil Nomination List (Unique Identifier: 240-87292229)

Figure D.2: Contractors Soil Profile Sheet

ESKOM COPYRIGHT PROTECTED

When downloaded from the WEB, this document is uncontrolled and the responsibility rests with the user to ensure it is in line with the authorized version on the WEB.

Eskom

Power Delivery Engineering
Line Engineering Services

Unique Identifier: 240-87292229
Revision: 2.0

Contractor's Soil Nominations List

Tower/ Test Pit No.	Tower Type	Leg A		Leg B		Leg C		Leg D		Leg E		Leg F		Comments
		*Foundation System	*Soil Type	*Foundation System	*Soil Type	*Foundation System	*Soil Type	*Foundation System	*Soil Type	*Foundation System	*Soil Type	*Foundation System	*Soil Type	

Project:	
Contractor:	
Date Compiled:	
Batch No.:	
Profiled by:	
Accepted by :	

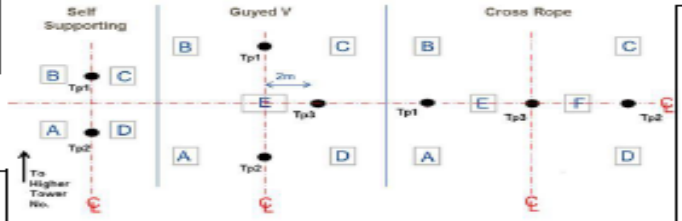

*Foundation System	*Examples:* Pad-and-pier, pad-and-plinth(center mast), Rock Anchor, Deadman(guy-anchor), Micro-pile(grout injected), Concrete piles.
*Soil Types	1, 2, 3, 4, Soft Rock (SR), Hard Rock (HR)

Contractor Company Logo

Figure D.3: Contractors Soil Nomination List

ESKOM COPYRIGHT PROTECTED

When downloaded from the WEB, this document is uncontrolled and the responsibility rests with the user to ensure it is in line with the authorized version on the WEB.

QUALITY AND INSPECTION PLAN - GROUT INJECTION ANCHOR CONSTRUCTION

Project No:	Project description															Revision 1
Quality preformed by - Signature Activity No and description	Instruction / Procedure / Drawing / Inspection / Template or Specification or Reference	DOCUMENT	ACTION	MEASUREMENT , CHECK, INSPECTION,	CONTRACTOR			ESKOM			TOWER AND FOUNDATION NUMBER					Remarks, Deficiency or Non-conformance Report numbers
											LEG A	LEG B	LEG C	LEG D	Mast E	
ANCHOR FOUNDATIONS	Method Statements (MS) and Specification: 240-47172520 (TRMSCAAC5.3)	Type of Control				Signature	Date		Signature	Date						
Tower setting out. Centre peg position Foundations setting out positions	Foundation set out drawings (clear of any objects, roads, water courses-dongas, fences, embankments slope edges etc.)	X	X	X	I			W								
Profile hole drilled and flushed with water. (not part of foundation)	Profile hole's log (as to M S) with all the following: (a) Contractor's nomination: soil type 1or 3 or soft or hard rock. (b) drill depths to layers etc.	X	X	X	I + T			I								
Anchor setting out.	Anchor setting out. Cap stub /link and anchor positions adequate space between stub and anchor plates	X	X	X	I			W								
Installation of anchors. As to M S. Logging of drill profiles	Profile Anchor hole's logs with all the following: (a) drill depths layers-soil type 1or 2 or soft or hard rock. (b) drill rates (c) grout pressure (d) grout mix (e) anchor type (f) sleeve tubes top of anchor (g) drawing No's	X	X	X	I + T			I								
Excavation Barricading	M S and TRMSCAAC5 cl 6.5.1 h)	X	X	X	I			I								
Cap Installation	Check stub /link position, Check rebar, Shuttering, Remove grout around top end of anchor and leave 150mm for construction joint into cap and install anchor plates and nuts. Photographs must be taken beforecasting of concrete. foundation anchors rake/angle to be in 10 degrees and single guy anchor and link to be in 3 degrees of requied angle.	X	X	X	I + T + H			I								
Concrete casting compaction(vibration) of cap	Check concrete delivery time, do slump tests and take concrete cube samples. M S , Works information and TRMSCAAC5 cl 6.6.10.	X	X	X	I			I								
Concrete finishing and curing	Cap top sloped and edges chamfered. M S and TRMSCAAC5 cl 6.6.13 and 6.6.5	X	X	X	I			I								
Clean tower site	(Environmental requirements for line completion check)	X	X	X	H + W			I								
Test cube results 7 and 21 day results	M S and TRMSCAAC5 cl 6.6.6	X	X	X	I + T			W								
Construction proof load test on Guy anchors	M S and TRMSCAAC5 cl 6.7.5	X	X	X	I + T			W								
Ultimate Load test -block anchor(deadman), pile or rock anchor	M S and TRMSCAAC5 cl 6.7.1	X	X	X	I + T			W								
Review all relevant inspection and test records		X	X	X	I			I								

Definitions:

H - Hold Point: A predetermined stage beyond which work shall not proceed without the attendance of and written authorization of a Eskom representative and photographs must be taken at

I - Inspection Point: A predetermined stage in the Quality product/process plan where a **inspection or check or measurement** must be preform to verify parameters and specification requirements.

T - Test / measurement check or action to be preformed

W - Witness point

S - Surveillance - general observation

S - Surveillance - general observation

M S - Method Statement

Figure D.4: Quality & Inspection Plan – Grout Injected Anchor Construction

ESKOM COPYRIGHT PROTECTED

When downloaded from the WEB, this document is uncontrolled and the responsibility rests with the user to ensure it is in line with the authorized version on the WEB.

Project: Project Title	Doc Number: as per project allocation
Contractor: Contractor Name Representive: Contractor Site Rep/Construction Manager Role: Site Agent Address: Contractor Address Contact number: Contractor Rep Contact Number	Date: date initiated Title: Engineering Change Notification – reason for change notification
Contract No: XXXX	Reference:

Early Notice of Field Change	Early Notice of Engineering Change	Drawing error/ommision	Value Engineering	Information	Instruction	Safety	Other
X							

Details of Instruction: Soil Nomination Amendment
Date Received: DD/MM/YYYY
Date Required: DD/MM/YYYY
Affected drawings/documentation:
This is affected drawing or documentation that would be affected by this change

2 Technical Details

2.1 Details Of Technical Changes

What has changed? Include photgraphs (annotated where necessary).

2.2 Additional Quantities

Does the repair/correct require additional quantities as per established BoQ?

2.3 Cost Impacts

What is the cost impact?

ESKOM COPYRIGHT PROTECTED

When downloaded from the WEB, this document is uncontrolled and the responsibility rests with the user to ensure it is in line with the authorized version on the WEB.

3 Additional Considerations Of Technical Change **3.1 Motivation and Benefits Of Change** Should proposed method for correction deviate from standard works, Contractor must highlight the benefits of proposing deviation. **3.2 Potential impact on Schedule and Procurement Plan** Imapct to schedule and/or procurement plan if extra materials are needed. **3.3 Safety Considerations** Are there any safety concerns. **3.4 Associated Risk** Does Contractor foresee any other risks? **4 Conclusion** Summary of request	
Change Proposed By: Designation: Contact No:	Estimated quantity: R XXXXXX Estimated Schedule Impact: XXX months
Site Manager:	Cost Code: Where Applicable
Contractor	Contractor Signature
Documentation reviewed and accepted by Eskom Design Representative	
Documentation reviewed and accepted by Design Engineer (where applicable)	
Change accepted by Project Manager	

Figure D.5: Guideline for Notification of Engineering Change

ESKOM COPYRIGHT PROTECTED

When downloaded from the WEB, this document is uncontrolled and the responsibility rests with the user to ensure it is in line with the authorized version on the WEB.

Annex E – As Built Documentation Format

As built Documentation Format

The latest As Built Specification should be adhered to.

On completion of construction the contractor, in conjunction with the project manager, is required to compile the final as built document as per the requirements outlined in Table E.1 and E.2 and in full in 240-72252925 (latest version).

Outline of Requirements

General Line Data

Project Name, Client, Eskom Contract No., Contractor Name.

Table E.1: Outline of General As-Built Data

Data Category	Line
Line Voltage	
Circuits	
Configuration	
Phase Conductor	
Jumper Conductor	
Earth Conductor	
OPGW	
OPAC (Optical Approach Cable)	
Insulators	
Route Length	
Tower supplier and tower steel grade	
Tower Types	
Guyed Suspension Tower	
Self-supporting Suspension Tower (0˚ to 3˚)	
Self-supporting Tension Tower (0˚ to 15˚)	
Self-supporting Tension Tower (15˚ to 35˚)	
Self-supporting Tension Tower (35˚ to 60˚ / 0˚ Terminal)	
Self-supporting Transposition Tower	

ESKOM COPYRIGHT PROTECTED

When downloaded from the WEB, this document is uncontrolled and the responsibility rests with the user to ensure it is in line with the authorized version on the WEB.

Table E.2: Project As-Built Requirements

ITEM REFERENCE AS PER AS-BUILT TEMPLATE	DATA	INFORMATION SUPPLIED BY:
A.	General Line Data	Project Manager
B.	Contractor Details	
B.1.	Main Contractor	Contractor
B.2.	List of Sub-Contractors	Contractor
C.	Summary of Project (Towers, Foundations and Earthing Specification	Contractor
D.	Earth Resistance Measurements	Contractor
E.	OPGW Installation	OPGW Contractor
E.1.	OPGW Schematic Layout	
E.2.	Colour Coding and Numbering	
E.3.	Power Meter Results and OTDR Reports	
E.4.	Splice Performance Summary	
E.5.	Power Line Carrier Frequencies	
E.6	Joint Box Positions	
E.7.	Assembly Drawings	
E.8.	OPGW Specification (As-built)	
F.	Electrical Line Parameters	Contractor
G.	Drawings	
G.1.	Tower Outline Drawings	Contractor
G.2.	Hardware drawings and OPGW Hardware	Supplier/Contractor
G.3.	Manufacturers Insulator Drawings	Supplier/Contractor
G.4.	Grading Rings	Supplier/Contractor
G.5	Tower Schedule (Including leg and body extensions)	Contractor
H.	Foundations	
H.1.	Foundation Drawings	Contractor
H.2.	Setting Out Drawings	Contractor
H.3.	Excavation Photos	Contractor
H.4.	Soil Nominations (including any amendment forms)	Contractor
I.	Hardware	
I.1.	Insulators	Supplier/Contractor
I.2.	Confirmation of equipment used for compression fittings	Letter of confirmation from contractor
I.3	Midspan Joints	Contractor
I.4.	Spacers/Spacer Dampers	Contractor

ESKOM COPYRIGHT PROTECTED

When downloaded from the WEB, this document is uncontrolled and the responsibility rests with the user to ensure it is in line with the authorized version on the WEB.

ITEM REFERENCE AS PER AS-BUILT TEMPLATE	DATA	INFORMATION SUPPLIED BY:
I.5.	Insulated Earth Wire Assemblies and Non-Standard Assemblies	Contractor
I.6.	Damping Devices	Contractor
I.7.	Miscellaneous Items (Aircraft warning spheres, bird diverters, warning lights, etc.)	Contractor
I.8.	Hardware Type/Sample Test Records	Supplier/Contractor
I.9.	Hardware Problems and Non-Conformances during Construction (Fitment Issues, Failures, etc.)	Contractor
I.10.	On-Site conversions to cater for Special Requirements	Contractor
J.	Free Issue Material Control Sheet	Contractor
K.	Line Profiles	Contractor
L.	Landowner Details	Project Manager
M.	Aerial Laser Scan (as-built)	Eskom Survey
N.	HD Visuals and Corona Checks from Flyover	Contractor
N.1.	HD Visuals	Contractor
N.2.	Corona Checks	Contractor
N.3.	Tripod Camera Records	Contractor
N.4.	Helmet Mounted Camera Records	Contractor
N.5.	Drone Inspections	Contractor
O.	Line Walkdown and Line Audit	Contractor
O.1.	Line Walkdown and Line Audit Findings	Contractor/Eskom
O.2.	Tower Top Inspection Sheets	Eskom
P.	Handover Certificates	Project Manager
P.1.	Galavanising certificates	
P.2.	Tower member paint specification	
P.3.	Steel mill certificates	
P.4.	Hardware release documentation	Eskom Quality
P.5.	Conductor certificates	
P.6.	OPGW and earth wire certificates	
P.7.	Insulator test certificates	
Q.	Permits	
Q.1.	Statutory Permits	Project Manager
R.	Incident Reports	Contractor

ESKOM COPYRIGHT PROTECTED

When downloaded from the WEB, this document is uncontrolled and the responsibility rests with the user to ensure it is in line with the authorized version on the WEB.

ITEM REFERENCE AS PER AS-BUILT TEMPLATE	DATA	INFORMATION SUPPLIED BY:
R.1.	Incident, Injury and Fatality Reports Related to Hardware/Mechanical Failure	
R.2.	Non-Conformance Reports	
R.3.	Concessions	
S.	Orange Site File Inspection Reports	Contractor
T.	TxSIS	
T.1.	TxSIS Upload Form	Project Manager
T.2.	TxSIS Input from Contractor	Contractor
T.3.	TxSIS Data	Project Manager
U.	Learning Points	Design Leader

ESKOM COPYRIGHT PROTECTED

When downloaded from the WEB, this document is uncontrolled and the responsibility rests with the user to ensure it is in line with the authorized version on the WEB.

Annex F – Access and Ground Erosion Protection for Overhead Line Construction

1. Scope and Purpose

This design specification deals with the construction of access routes, soil erosion rehabilitation and prevention, as applied during overhead line construction lines with operating voltages of 66kV and above.

Requirements are provided to enable appropriate design and construction in the following areas:

- Servitude access road water runoff control and drainage.
- Slopes, roads, embankments, cuttings and fillings.
- Positioning and construction of water diversion berms
- Drift or water course crossings.
- Low level bridge or culvert crossings.
- Tower erection platforms in sloping terrain
- Erosion rehabilitation

Where deviations to applicable standards are suggested in this guideline, these are subject to approval by the **Employer's** environmental representative.

2. Normative references

The following normative documents contain provisions which, through reference in this text, constitute provisions of this specification. In cases of conflict, the provisions of this specification shall take precedence. Unless otherwise stated, the latest revisions, editions and amendments shall apply.

TRMSCAAC 6: Eskom Transmission Line Towers and Line Construction Specification

3. Compliance statement

A statement of compliance and/or deviation from this standard is required as a tender returnable.

Refer to Volume 7 Section 2 for the Compliance / Deviation Form relevant to this standard.

4. Access planning

4.1 Parties and inputs to access planning

Access to each structure location should be planned by the following parties:

- **Contractors** Environmental Officer
- **Contractors** Surveyor or Representative experienced in line construction
- **Employers** Environmental Representative

Access should be planned with reference to the following input information:

- **Environmental Management Plan (EMP)**
- **Suggested Access Plan (if available)**
- **Landowner Restrictions**

ESKOM COPYRIGHT PROTECTED

When downloaded from the WEB, this document is uncontrolled and the responsibility rests with the user to ensure it is in line with the authorized version on the WEB.

4.1.1 Basic Access Philosophy

The following basic access principles shall apply:

a) The preferred access route will follow a “least impact” course along the line within the servitude boundary.

b) As per Standard 240-47172520 maximum use of existing roads and tracks should be made, as far as practicable, and the condition of private roads recorded prior to use by the **Contractor’s** Environmental officer.

c) Where this is not possible due to potential erosion risks, environmental concerns, or landowner restrictions, access to each tower or series of towers should follow a “least impact” course from the closest practical location.

d) All such roads should be aligned as far as possible to avoid the need for any “cut or fill” to the existing ground level. Any road construction work requiring the cutting of natural ground level shall require prior approval and participation from the **Employer’s** appointed environmental control officer.

e) Where the least impact route traverses terrain with a side slope of more than 8.5% (0,45m over 3m or 1:6.5) road construction requiring cut and fill may be undertaken. This guideline may be adjusted where it can be demonstrated that a potentially unsafe access route or increased erosion could result.

f) Where it is not deemed practical or desirable to construct any roads, access by a suitable footpath can be made to ensure safe passage on foot. Preferably, vehicular access to within 200m to such “inaccessible” tower sites should be made to allow concrete to be pumped to site. In such cases, maximum use of hand excavation and erection can be pursued.

g) Where the above methods are not possible, helicopter assisted construction techniques could be considered. This is the least favoured construction access option from a cost perspective.

h) Where roads requiring cut or fill have been constructed, these should not be closed after construction, unless precluded by environmental, erosion or landowner restrictions. Rehabilitation and erosion protection of such roads must be completed at the completion of construction.

i) The installation requirements for berms may be relaxed during the construction period to facilitate easier access to tower positions, provided that a moderate erosion potential has been verified by the Environmental officer.

5. Access roads

Roads should be planned according to principles of water runoff and should ideally be positioned on a watershed or ridge, and along contours. The overall slope of a road should not exceed 7% and may over short distances be increased but should never exceed 18%. Sensitive soils may cause a change in route.

All access routes are to be flagged to enable visitors and suppliers to reach specific tower locations on the accepted access route.

5.1 Positioning and construction of water diversion beams

Berms are to be constructed with the primary purpose of preventing erosion of access roads, however the profile of the berm is to be shaped with due consideration to both the resulting ride quality of the access track.

The **Contractor** may elect to delay the construction of berms to the end of the contract in areas where a moderate erosion potential exists, provided that erosion developing along the access road during the construction activities shall be rehabilitated promptly, and that existing drainage systems shall not be blocked or altered in any way by construction activity.

A lower average berm spacing is suggested by this specification: Berms spacing (in meters) = 300m / Slope of the road (%). See Figure F.1 below.

In very flat areas with a low erosion potential, this implies that berms may not be required at all.

ESKOM COPYRIGHT PROTECTED

When downloaded from the WEB, this document is uncontrolled and the responsibility rests with the user to ensure it is in line with the authorized version on the WEB.

The inclusion of erosion control measures and berm spacing may be adjusted as directed by the **Employer's** environmental officer.

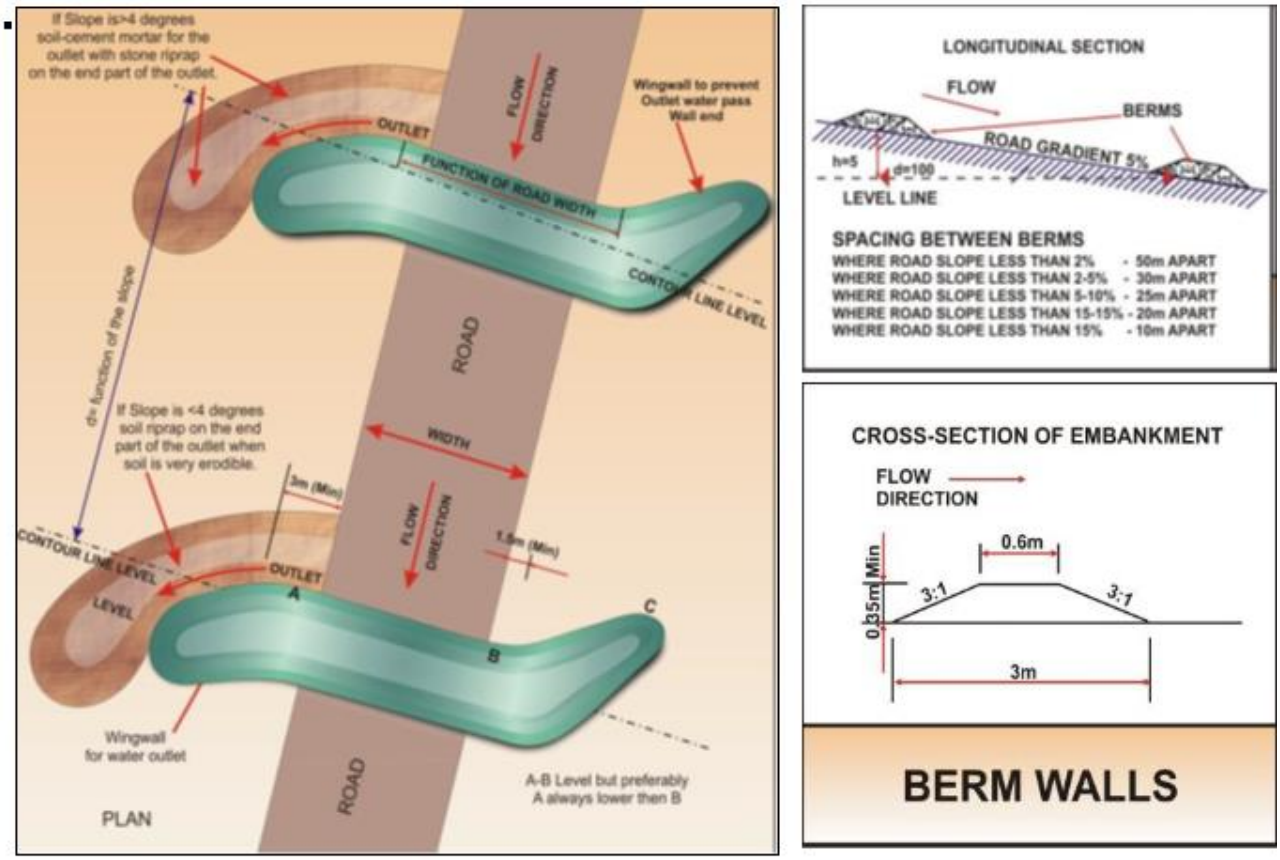

Figure F.1: Alignment of water diversion beams

5.2 Constructon of new roads in sloping terrain

The maximum riding surface width for newly constructed roads is 3.5m, provided that road widening may be required to enable passing of vehicles at appropriate intervals.

The cross fall slope of roads requiring cut to fill shall be 1-2%, against the natural ground slope to avoid erosion of filled material. Fill material must be compacted by vibrating roller in 150 mm layers.

Runoff is drained via a 300mm deep channel (See Figure F.2) and directed off the riding surface at regular intervals via diagonal berms sloped downhill at 10-40m spacing (lined with stone or precast strips). Such berms may require soil stabilisation in steep access roads (See Figure F.1 and Figure F.2).

ESKOM COPYRIGHT PROTECTED

When downloaded from the WEB, this document is uncontrolled and the responsibility rests with the user to ensure it is in line with the authorized version on the WEB.

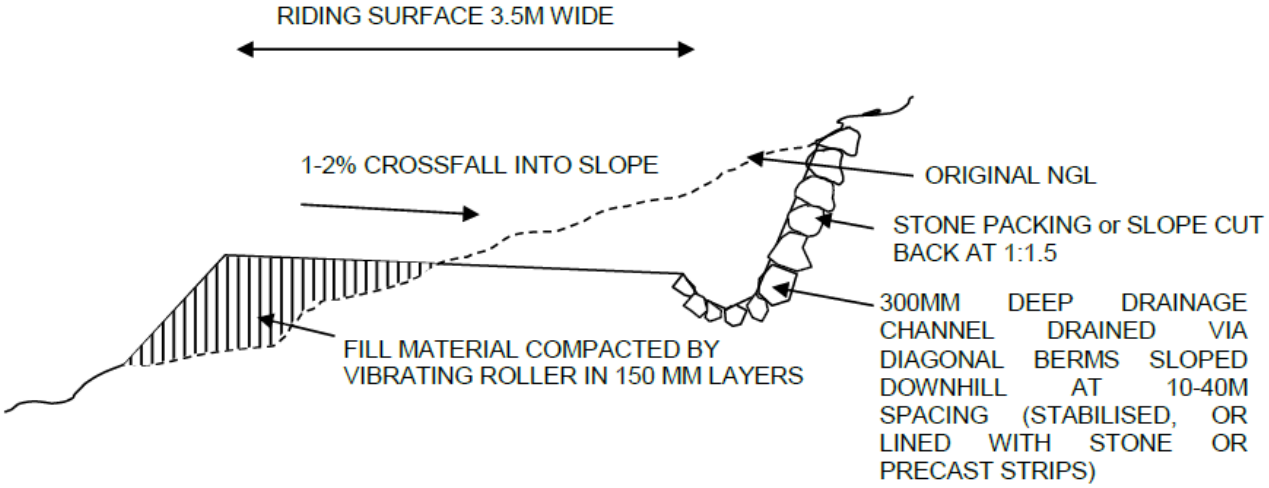

Figure F.2: Typical cross-section of access road requiring cut and fill

5.3 Drainage on roads in sloping terrain

5.3.1 Stabilised Outlet Berms

Where significant erosion potential exists on sloping roads constructed with cut and fill, additional erosion protection will be required on the berm itself, and the outlet of the berm.

In moderately sloping areas, the berm may be stabilised and compacted with 1:8 cement soil mixture. For stabilisation to be effective, it is imperative to mix and moisten the stabilised soil before compacting the berm with a mechanical hand operated compacting roller. Failure to effect proper stabilisation as per the preceding method will result in the gradual disintegration of the berm.

In areas with steeper slopes, berms may be lined with stone pitching (Figure F.3) or an “Amorflex” type interlocking system (Figure F.5).

Alternatively, the approach of berms may be strengthened by the casting of 600mm x 175mm deep concrete strips.

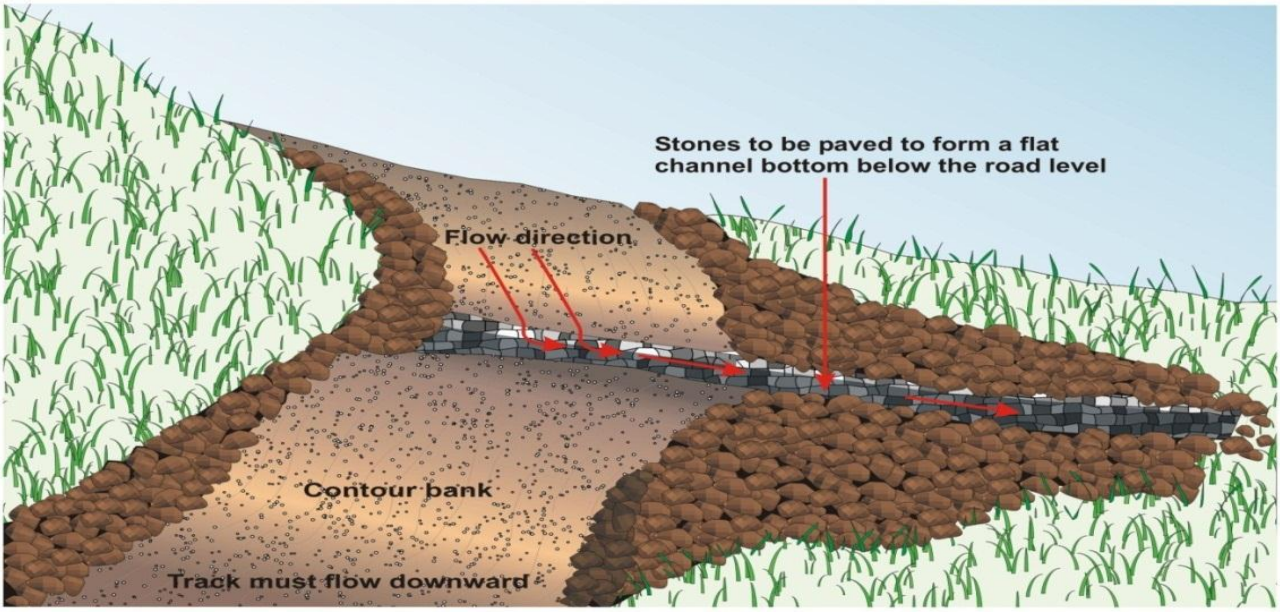

Figure F.3: Stone pitched outlet berm

ESKOM COPYRIGHT PROTECTED

When downloaded from the WEB, this document is uncontrolled and the responsibility rests with the user to ensure it is in line with the authorized version on the WEB.

5.3.2 Gabion Outlet Drains

Where there is a risk that water run-off from berms in sloping roads could erode the fill material or outlet area, it is preferable to construct a protected outlet area with stone rip – rap as illustrated in Figure F.4. However, in steeper terrains, a gabion outlet drain may be specified, based on the erosion potential at the outlet.

Outlet drains will refer to positions where the road forms a dip, water then accumulate and flood the road service causing the water to flow out at the shoulder of the road (or lowest point on road shoulder) causing eroding of the road shoulder.

These drains consist of 600mm high, 1m long and 600mm wide gabion walls with a reno mattress outlet. The gabions are set 300mm deep at the road surface. Measurements may be adjusted by the supervisor depending on the road condition.

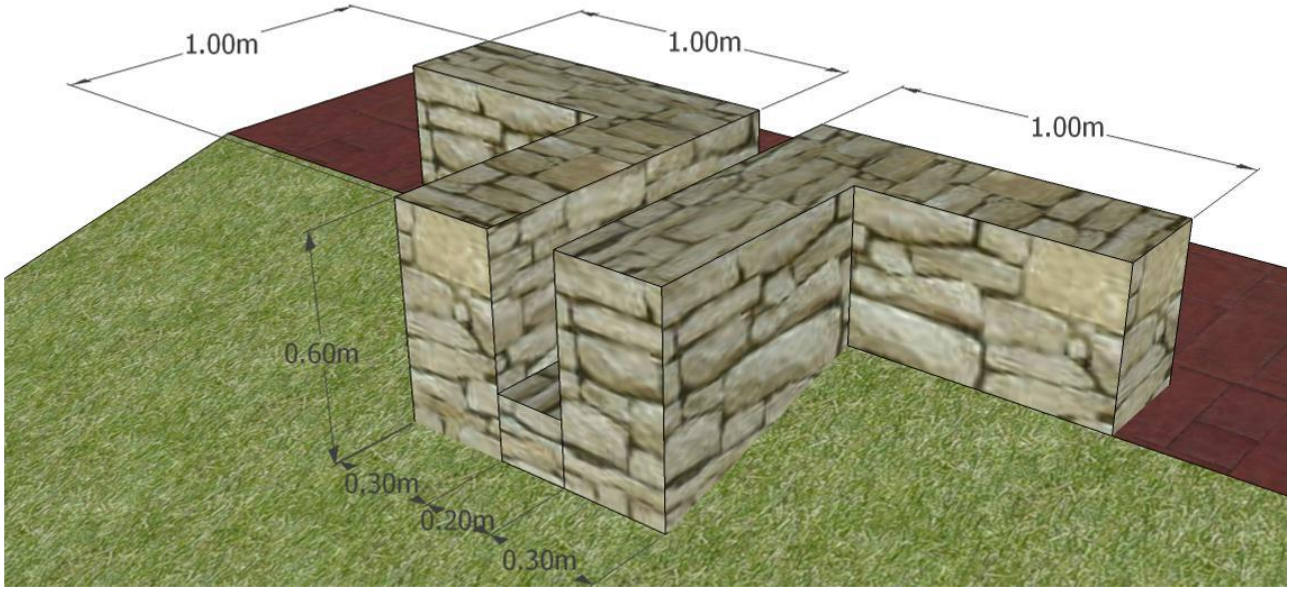

Figure F.4: Gabion Outlet Drain

5.4 Armorflex strip roads

The maximum longitudinal slope for a road ascending sloping terrain shall not average more than 1:10, with a maximum for short lengths being 1:16, provided such lengths are constructed with Armorflex or similar approved continuous precast erosion protection, as shown in Figure 24 or with concrete strip roads as specified in 0.

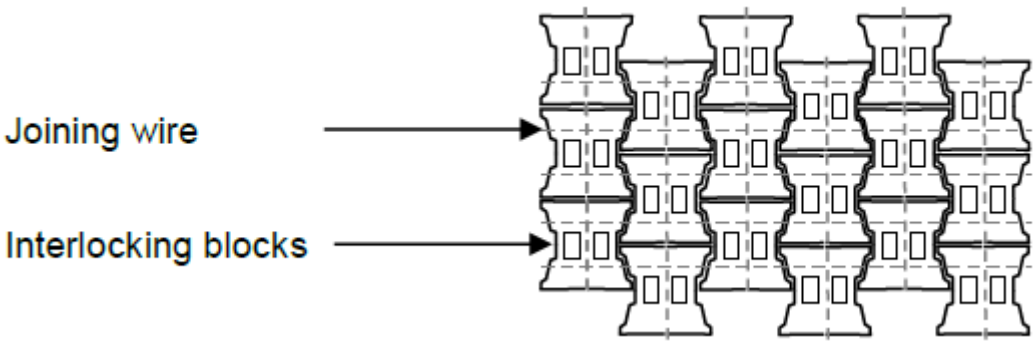

Figure F.5: "Armorflex" type interlocking system for steep access of up to 1:16

ESKOM COPYRIGHT PROTECTED

When downloaded from the WEB, this document is uncontrolled and the responsibility rests with the user to ensure it is in line with the authorized version on the WEB.

5.5 Concrete strip roads

Strip roads are constructed on the steep sections of the access road only. Concrete strips will be cast 600mm wide and 900mm apart, centre to centre. Minimum thickness of the concrete will be 175mm.

Grooved joints are used where the strips are placed in a continuous operation in lengths considerably greater than 1.5m. Keyed joints are to be used in the so called alternate-panel method of construction, i.e. the first, third and fifth panels, etc. are placed on the first day, and the in-fill second, fourth and sixth panels on the second day, etc. Where continuous placing with grooved joints is interrupted for more than an hour, a keyed joint is required. Each strip must be divided into panels by transverse grooved or keyed joints. For very steep slopes it is preferable to use keyed joints.

The water content of the concrete must be reduced to prevent the concrete from flowing downhill during compaction. The target slump for strip road concrete is 60mm.

Panel anchor blocks must be incorporated in the construction of the concrete strips at bottom end of the slope.

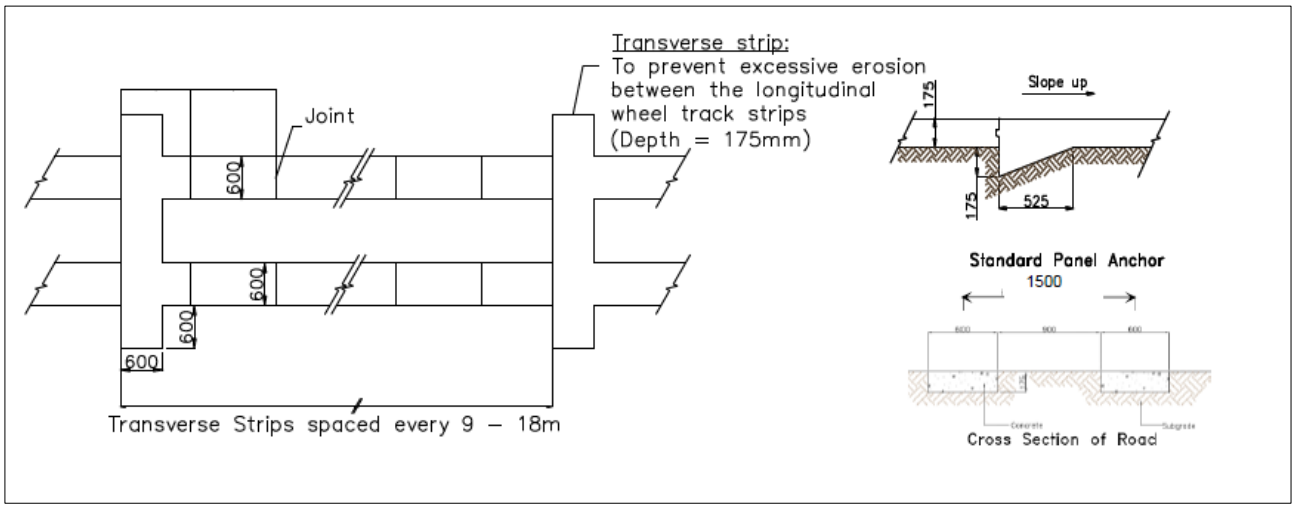

Figure F.6: Concrete strip road for steep access of up to 1:16

5.6 Closure of roads for erosion control

While the utility should attempt to maintain access to all tower sites on the servitude, there are situations where road closures will be required. These locations are usually in environmentally sensitive sites and should be flagged for closure in the EMP. The closure of a road may also be specifically requested by the landowner.

In areas of 30 % slope and less, the fill of the road should be placed back into the roadway, to restore the natural ground slope as indicated in Figure F.6. Here it is important to use equipment that does not work outside of the road it is closing. (For example a Tractor Loader Back-actor may be used and should operate from the cut portion of the road, working backwards and closing the road as it retreats.)

On steeper slopes (greater than 30 % slope), the equipment should break the road shoulder down, so that the slope nearly approximates to the original slope of the ground. The cut banks should be pushed down into the road, and a terraced side slope should be re-established with an erosion control system and re-vegetated.

ESKOM COPYRIGHT PROTECTED

When downloaded from the WEB, this document is uncontrolled and the responsibility rests with the user to ensure it is in line with the authorized version on the WEB.

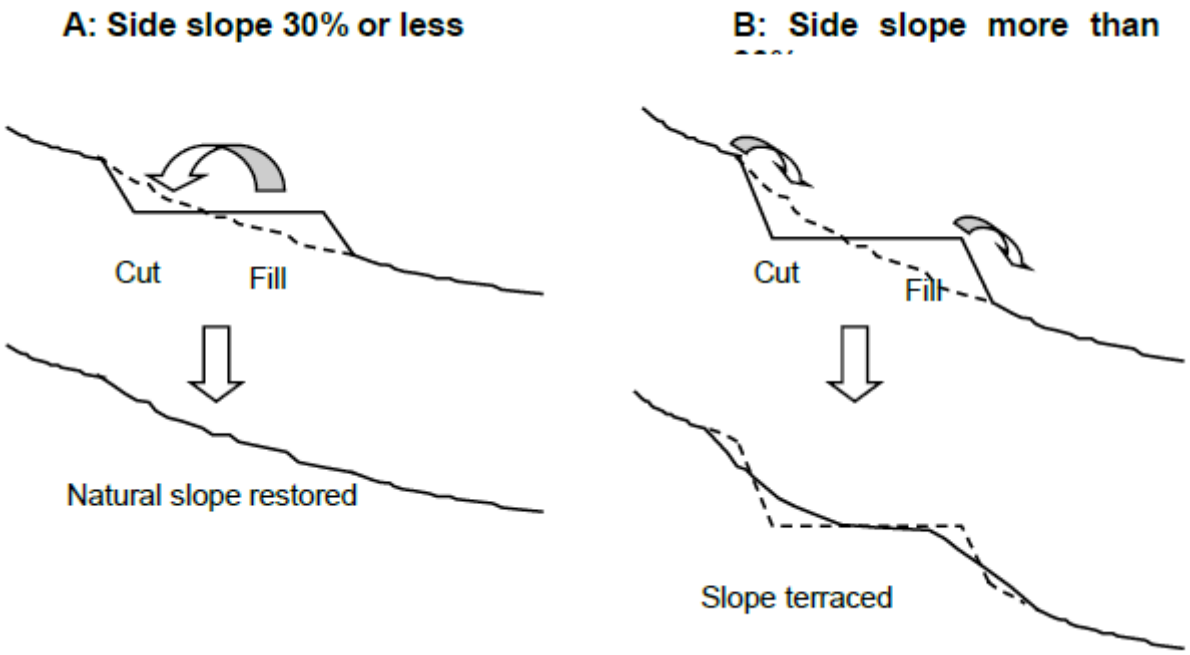

Figure F.7: Road Closure in steep terrain

Replacement of earth should be at a slope less than the normal angle of repose (the natural angle of soil spill) for the soil type involved.

Rehabilitation can be done by using Geo grids (Geotex) or Geo cells (Hysan or Multi cells) with topsoil and re-seeding. Note that Hysan cells and such like grids merely contain topsoil on a temporary basis to allow the re-growth of natural vegetation, and are not suitable to carry traffic or for use in the presence of larger amounts of flowing water.

Where towers are placed on steep slopes resulting in disturbed surfaces, or loose ground, the slopes should be rehabilitated or refurbished by one of the following methods:

- Steep slopes: use retaining systems such as Gabion basket systems, retaining blocks or stone masonry.
- Moderate slopes: use Geo grids (Geotex) or Geo cells (Hyson or Multi cells) with topsoil and re-seeding.

Where access roads have crossed cultivated farmlands, the lands should be rehabilitated by ripping to a minimum depth of 600mm.

6. Water crossings

The construction of permanent stream crossings will only be undertaken where no alternative access to tower position is possible.

The construction of temporary accesses for the purposes of construction is subject to the **Employer's** environmental representative and environmental restrictions.

6.1 Water courses and small river crossings

If access is across running water, precautions should be taken not to impede the natural flow of water.

ESKOM COPYRIGHT PROTECTED

When downloaded from the WEB, this document is uncontrolled and the responsibility rests with the user to ensure it is in line with the authorized version on the WEB.

The banks of small rivers and water courses upstream and downstream of crossings are environmentally sensitive areas which need to be protected from erosion. When cutting through the embankments of watercourses and small rivers, the road cuttings should likewise be protected to prevent erosion from spreading in the direction of the servitude road.

No soil should be pushed into the watercourse, as this will impede the natural flow of water. Rather, the banks of the watercourse should be cut as illustrated in F.8. Watercourse crossings should be designed and maintained to withstand a 1 in 20 year flood.

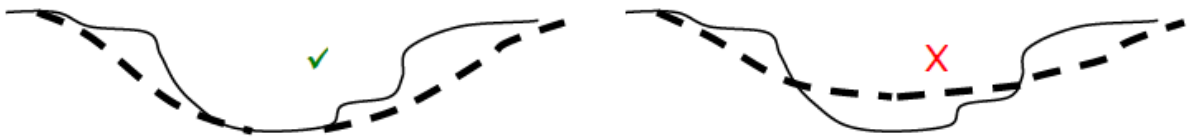

Figure F.8: Correct and Incorrect methods of cutting stream crossings

6.2 Temporary dry bed/marsh crossings

Where sandy river beds, moderately marshy or soft soil areas are to be crossed which cannot support construction vehicles, a temporary crossing surface may be constructed using a 300mm layer of primary crusher run (150mm stone), topped with 26.5mm stone and crusher dust.

Alternatively, Cellular Confinement Systems (CCS, also known as geocells), may be used in conjunction with a graded stone mix (5-19mm) or gravel. See figure F.9.

Figure F.9: Increasing load bearing capacity using a cellular confinement system (Sources: Elmich.com and Geoproducts.org

6.3 Drift water course crossings

The construction of drifts must be aligned with stream bottoms as shown in Figure F.8. Experience has shown that failure to execute this will result in the tilting or breakup of the drift.

Drifts may be constructed on Reno mattresses, as shown in Figure F.10.

For faster flowing water velocities (>2m/s), “Armorflex” type paving (illustrated in Figure F.5) should be used.

ESKOM COPYRIGHT PROTECTED

When downloaded from the WEB, this document is uncontrolled and the responsibility rests with the user to ensure it is in line with the authorized version on the WEB.

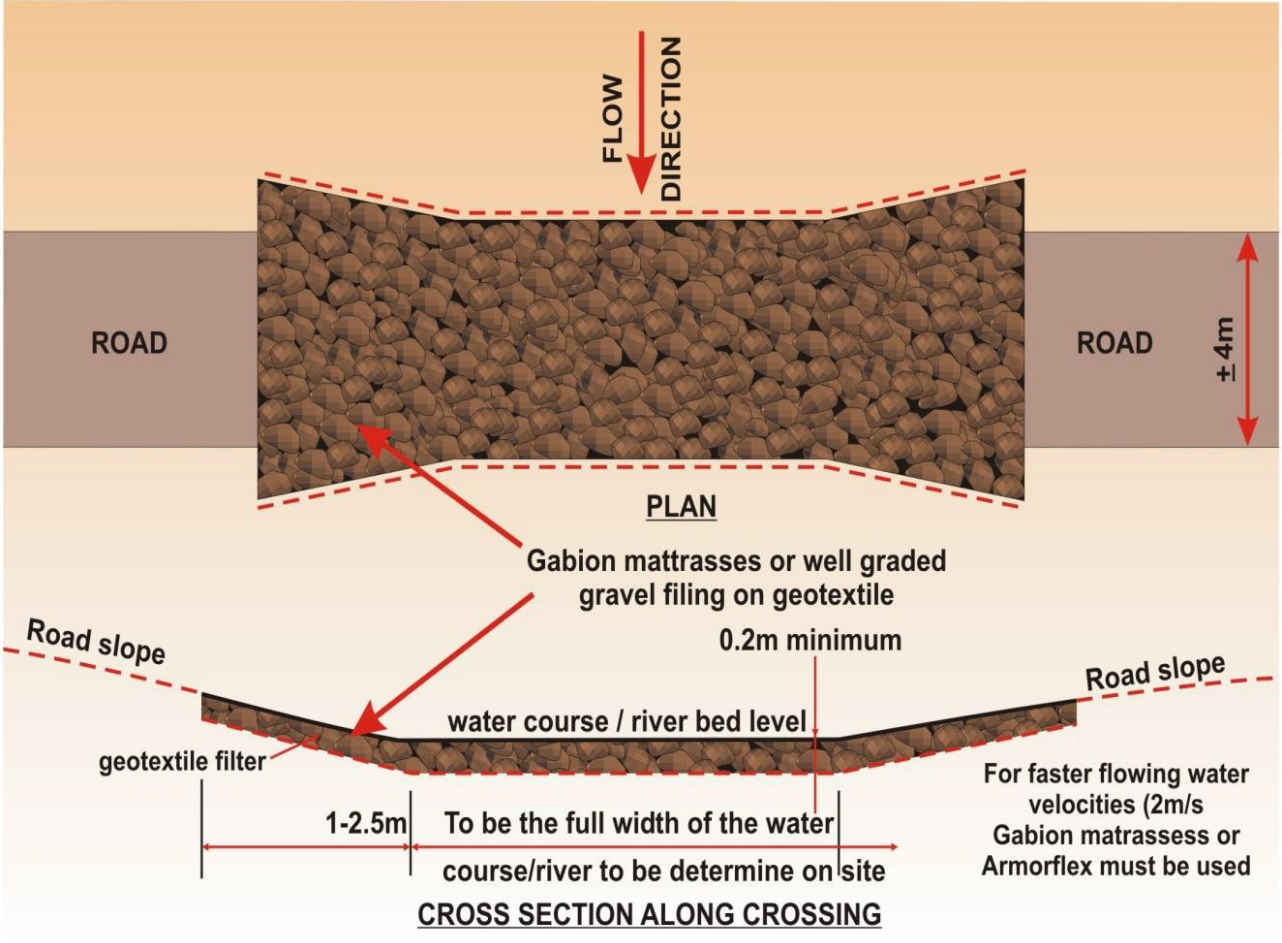

Figure F.10: Water course crossing with Gabion mattresses or rock/gravel filling on Geotextile Filter Material

6.4 Low level bridge or culvert crossings (pipes with concrete slabs)

Low level bridge or culvert crossings should be constructed and maintained bearing in mind the following:

The combined diameters of the pipes in the bed stream should be equal to the width of the water course, that is, the distance from one embankment to the opposite embankment, and have a diameter of approximately the depth of the 1 in 5 to10 year flood level.

The pipes should be laid with a cross-fall of 2 to 5 % on a 150mm+ thick concrete blinding layer. They should be built-in at the ends with rock mortar walls (or gabions) and an in-between fill of rock or gravel mortar should be used. The rock mortar walls and fill should extend well into the embankments (1to 2 m).

For higher water flow volumes and velocities, the top layer over the pipes should be a reinforced concrete slab of ± 350mmthick.

Embankments should be built up with stone and mortar (or cells with gravel and mortar or other means for example, gabions etc.) to about ± 0.3 m above the 5-year flood levels.

The riverbed should be protected for about ±1 m upstream and ± 2 to 3 m down-stream with mortar stone rip rap or Hyson cells with stone. Refer to Figure F.11 for the design layout.

ESKOM COPYRIGHT PROTECTED

When downloaded from the WEB, this document is uncontrolled and the responsibility rests with the user to ensure it is in line with the authorized version on the WEB.

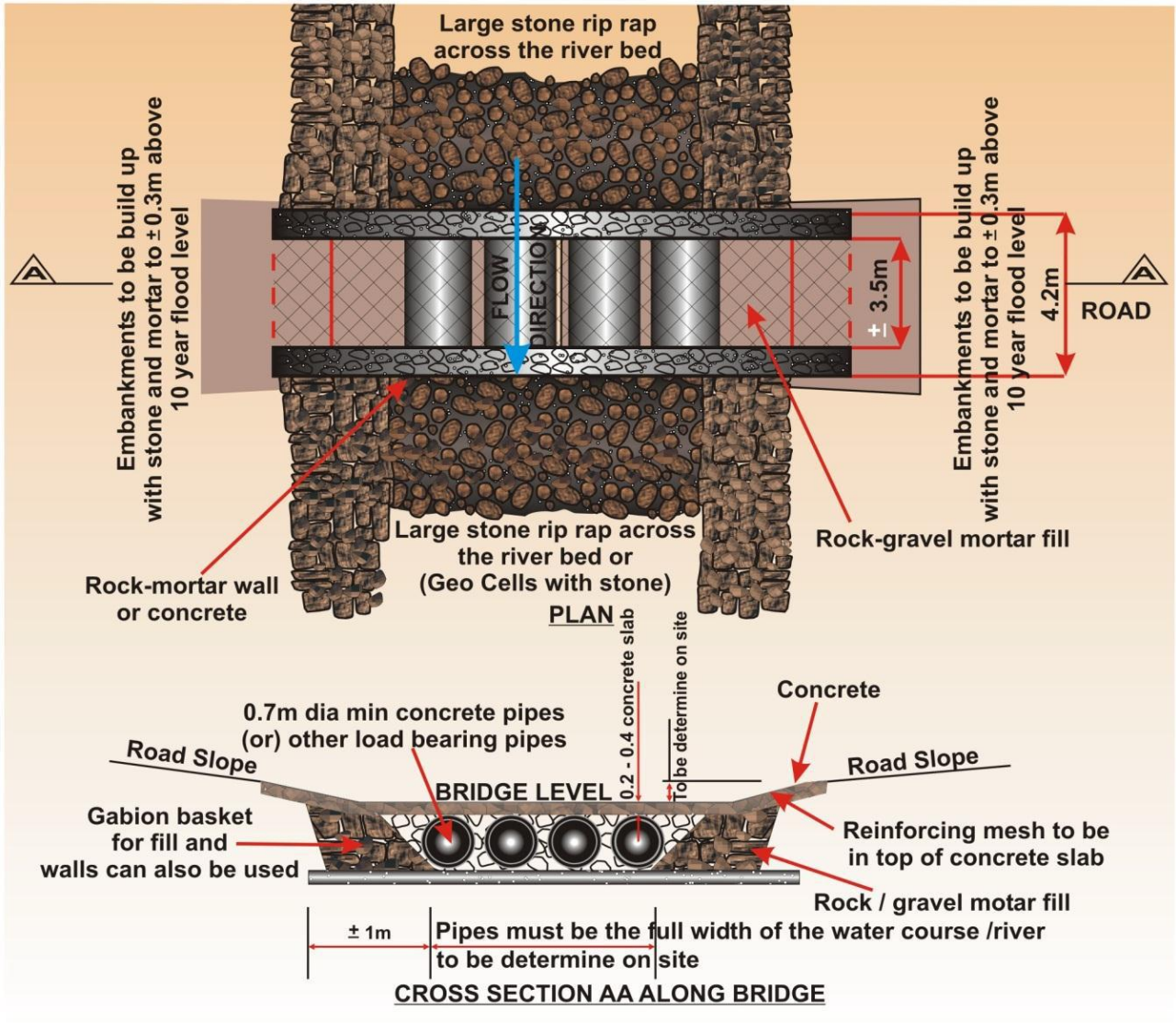

Figure F.11: River/Water course crossing with pipes, rock/gravel mortar filling and concrete slab

7. Tower sites in sloping terrain

The majority of tower sites should be positioned such that access is possible with the minimum effort. While due care and effort should be undertaken in the finalisation of tower locations, the presence of more suitable tower positions may be made possible by minor adjustment in tower locations during construction. Where relevant, this option is considered preferable over the construction of special access roads and platforms.

7.1 Alignment of access to tower sites

The alignment of access roads in towers in sloping terrain must be planned by all relevant parties.

The alignment must suit access requirements for foundation construction and tower erection. Unless precluded by environmental restrictions, the alignment must aim to provide access for a rough terrain crane, rough terrain trucks, and 6-wheel drive concrete trucks.

The access alignment must also be suited to the tower footprint, as shown below. For guyed structures, access may be aligned within the footprint of tower legs, while self-supporting towers may be suited to the construction of access roads around the tower legs.

ESKOM COPYRIGHT PROTECTED

When downloaded from the WEB, this document is uncontrolled and the responsibility rests with the user to ensure it is in line with the authorized version on the WEB.

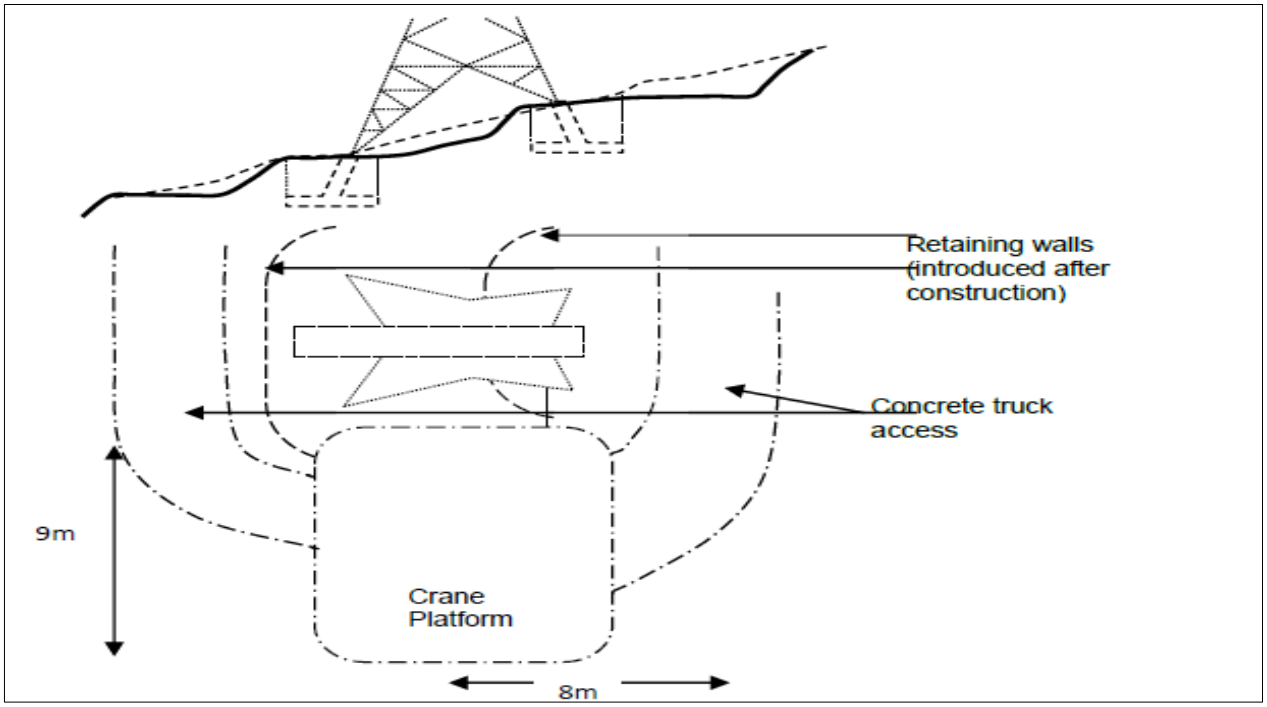

Figure F.12: Typical access of self-supporting lattice tower

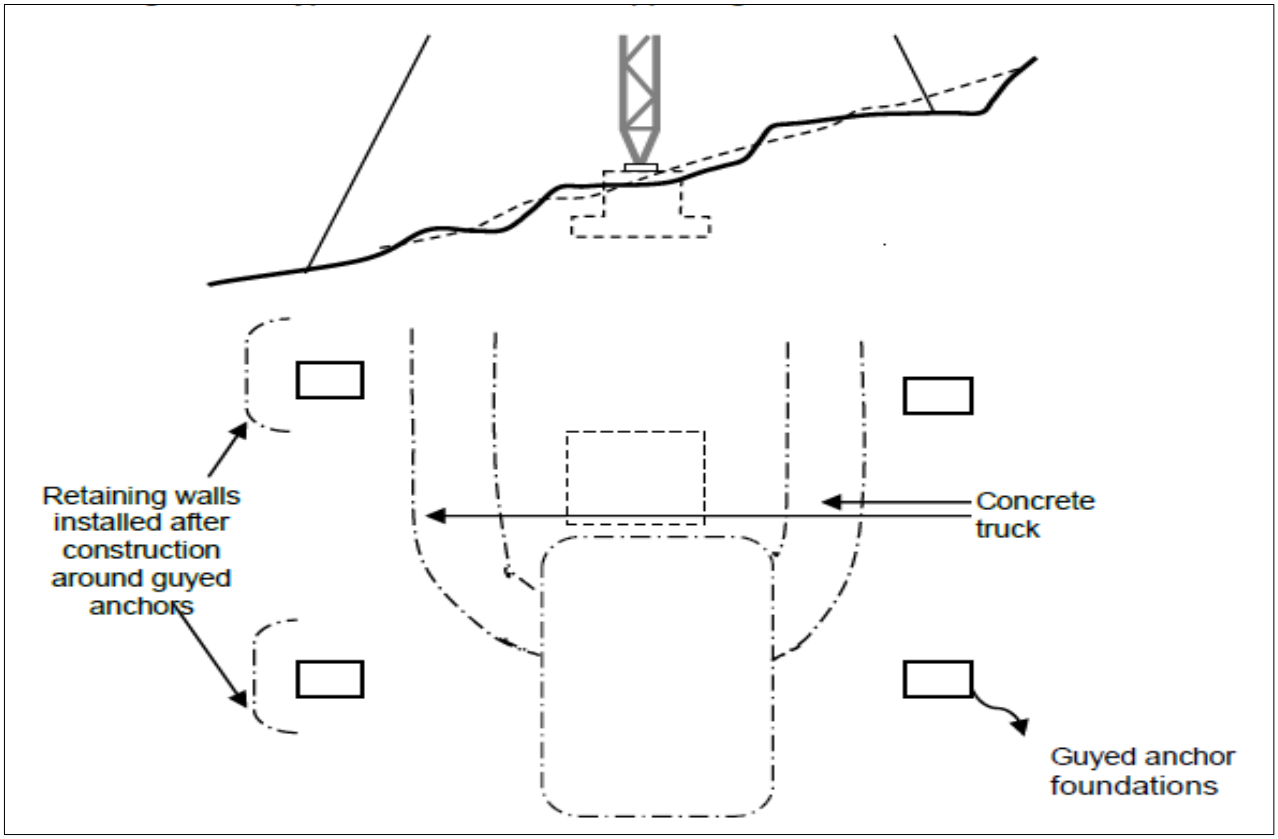

Figure F.13: Typical access to guyed tower

ESKOM COPYRIGHT PROTECTED

When downloaded from the WEB, this document is uncontrolled and the responsibility rests with the user to ensure it is in line with the authorized version on the WEB.

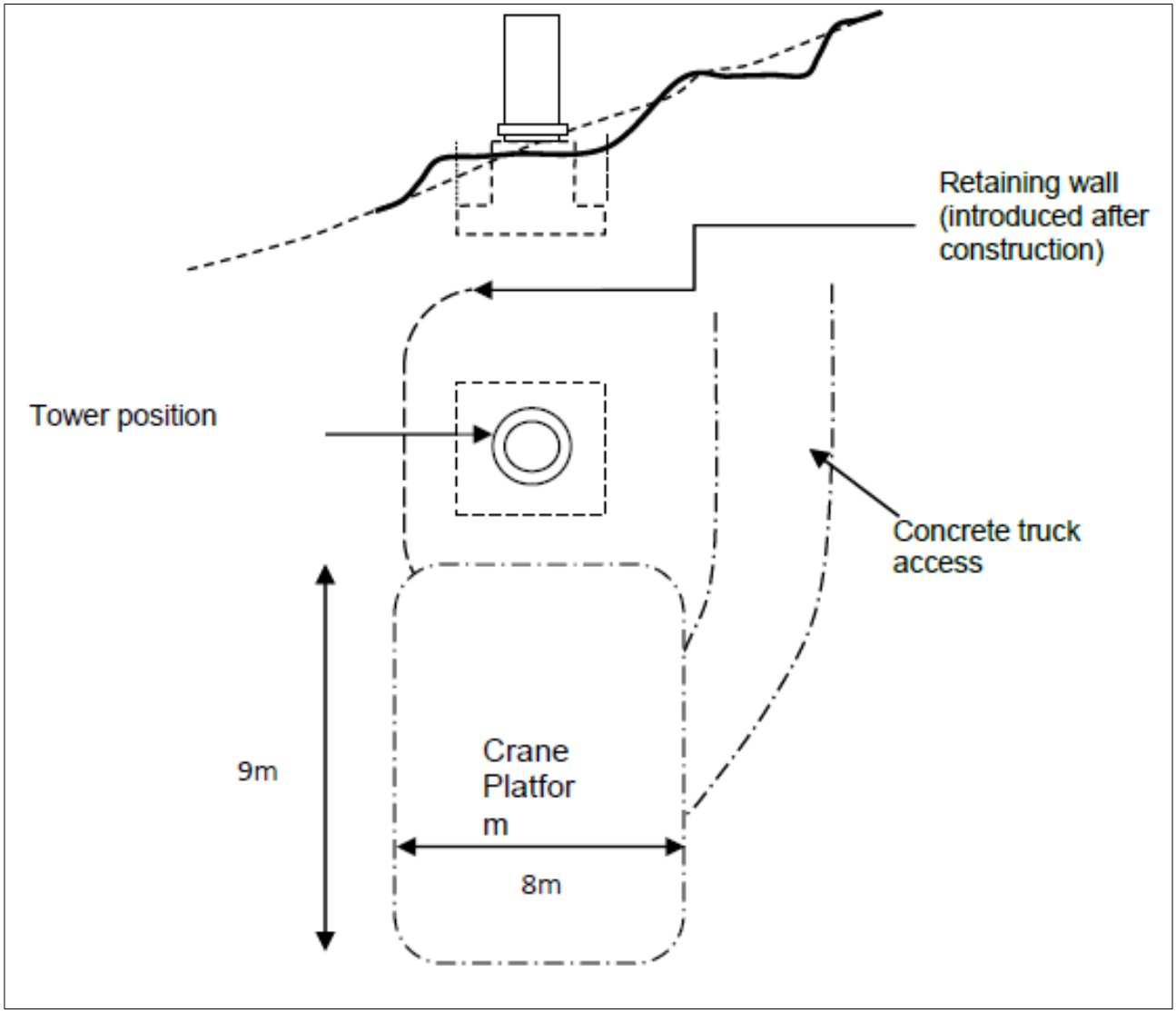

Figure F.14: Typical Access to Self-Supporting pole

7.2 Access for cranes

The footprint for outriggers of a typical 80 ton crane is about 8 x 9m, however the outriggers need not be placed of a completely level platform. The maximum crossfall slope for a rough terrain crane suited to overhead line construction is about 5% or 1:20.

ESKOM COPYRIGHT PROTECTED

When downloaded from the WEB, this document is uncontrolled and the responsibility rests with the user to ensure it is in line with the authorized version on the WEB.

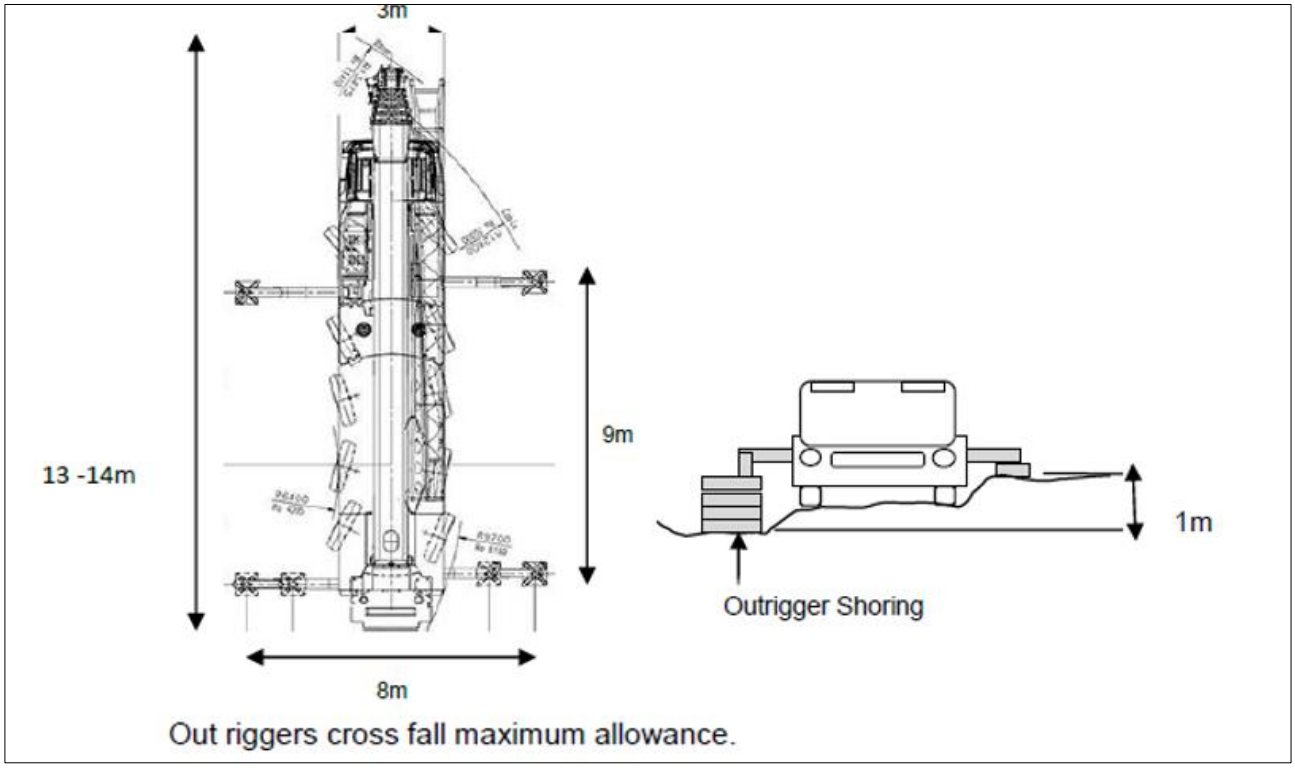

Figure F.15: Typical 80 ton crane plan dimensions

Outrigger shoring, using railway sleepers or thick timber boarding will usually be required in areas with significant crossfall.

8. Rehabilitation of tower sites and access roads

At the completion of construction, repairs may be required on access roads to restore them to their original condition.

Where berms have been eroded or worn away because they were constructed using unsuitable localised material, alternative material for refurbishment and maintenance should be used. The following methods may be considered:

Where the local material has high clay content or consists of a sandy soil with little variation in particle size, the soil needs to be improved. The properties of the soil can be improved by the addition of stabilising agents such as slaked lime in the case of clayey soils or cement in the case of sandy soils. The berm material stabilised in this way should be mixed in the ratio of one part cement or lime to eight or ten parts of soil. This material should be properly mixed, moistened, placed and compacted.

Borrow pits may be utilised to source more suitable material. The location of borrow pits, and their rehabilitation should be specified in the EMP.

Under normal circumstances, the majority of tower sites, being located on relatively even terrain, will not require extensive rehabilitation or mitigatory measures. If the top-soil is replaced in the final layer of backfill, natural ground cover vegetation will usually grow back in spite of extensive removal of surface vegetation during construction.

Any soil removed by erosion, must be evenly filled back and, graded to conform to the surrounding terrain. During foundation excavation, care must be taken to replace top-soil to the final layer of foundation backfill. Failure to replace topsoil in the final layer will leave infertile sub-grade soil on the surface, thus impeding re-growth. The EMP may in certain instances also call for the re-planting or re-seeding of certain sites. All tower sites should be rehabilitated (slope areas to be stabilized) and maintained by methods applicable to the situation. Maintenance should be in accordance with the requirements of the EMP.

ESKOM COPYRIGHT PROTECTED

When downloaded from the WEB, this document is uncontrolled and the responsibility rests with the user to ensure it is in line with the authorized version on the WEB.

The following environments however, can constitute sensitive sites:

8.1 Arid environments or sparse vegetation

These sites are typically located in areas of the Karoo and Namibian desert. The ground vegetation, when disturbed, can take years to recuperate, and there is not sufficient natural moisture to permit re-planting of natural flora.

The principle mitigatory measure is to limit the destruction of vegetation, by strict adherence to minimizing the extent of damage. This includes limiting the available working area and avoiding the creation of multiple tracks.

8.2 Sloping terrain

These tower sites require various forms of terracing. This not only ensures that erosion is limited but aids in maintaining the uplift capacity of foundations, which is invariably compromised in sloping terrain.

The terraced soil requires the construction of soil retaining systems, which include the use of:

- Stone walls, consisting of natural stone which are either loosely packed (adequate in mildly sloping terrain), or laid using mortar.
- Stone pitching, entailing the use of natural stone which is overlaid on the side slopes of terraces and then cemented by mortar.
- Pre-cast retaining systems, generally consisting of interlocking pre-cast concrete blocks.
- Gabion Mattresses, consisting of wire baskets which are filled with natural stone.

The use of natural materials is favourable not only from an aesthetic, but also from a cost efficiency point of view, and should be utilised where availability permits.

8.3 Proximity to flowing or still water

Erosion of river banks have resulted in compromised tower foundations in a number of instances. In these cases, it is preferable to utilise resilient systems, such as gabion mattresses. Gabion mattresses have the added benefit that they are flexible, and continue to provide protection even after surrounding material has been eroded (in contrast to other retaining systems, which can topple after heavy flooding).

9. Post construction inspections

The first post construction inspection should be conducted upon hand-over, and should be conducted jointly by regional staff, project managers and engineers responsible for design.

The second (and most important) should take place 11 months after hand over, in order to asses:

- the extent to which natural re-growth is possible
- the erosion resulting from the preceding season, taking into consideration the amount of rainfall
- the need for additional erosion protection or re-vegetation

10. Erosion prevention structures

These structures or systems are used in eroded areas and aim to control the flow of water, halt active erosion and re-establish vegetation. Three categories of solutions are suggested by Suthers (2002). They are:

10.1 Heavy systems

These solutions include concrete or brick structures and gabions and reno mattresses, etc.

ESKOM COPYRIGHT PROTECTED

When downloaded from the WEB, this document is uncontrolled and the responsibility rests with the user to ensure it is in line with the authorized version on the WEB.

10.2 Gabion mattress walls

Soils or up slope embankments which are subjected to dynamic or static loading must be stabilised to ensure equilibrium of the surrounding environment. When soils is confined or loaded, distributing forces are set up that may give rise to sliding, overturning and bearing failures. To counteract these effects slope reinforcements may be required.

The specifications as referred to in SANS 1200DK should be taken in consideration when building Gabion Mattress Retaining Walls.

The specifications and sketches in this document will refer to the protection of service roads against up-slope rock and soil sliding which might damage the access / service road or prevent access along the service road.

The following schematic sketch will illustrate the layout of a Gabion wall. Dimensions will need to be calculated according to the slope gradient, erosion risk and composition of the soil.

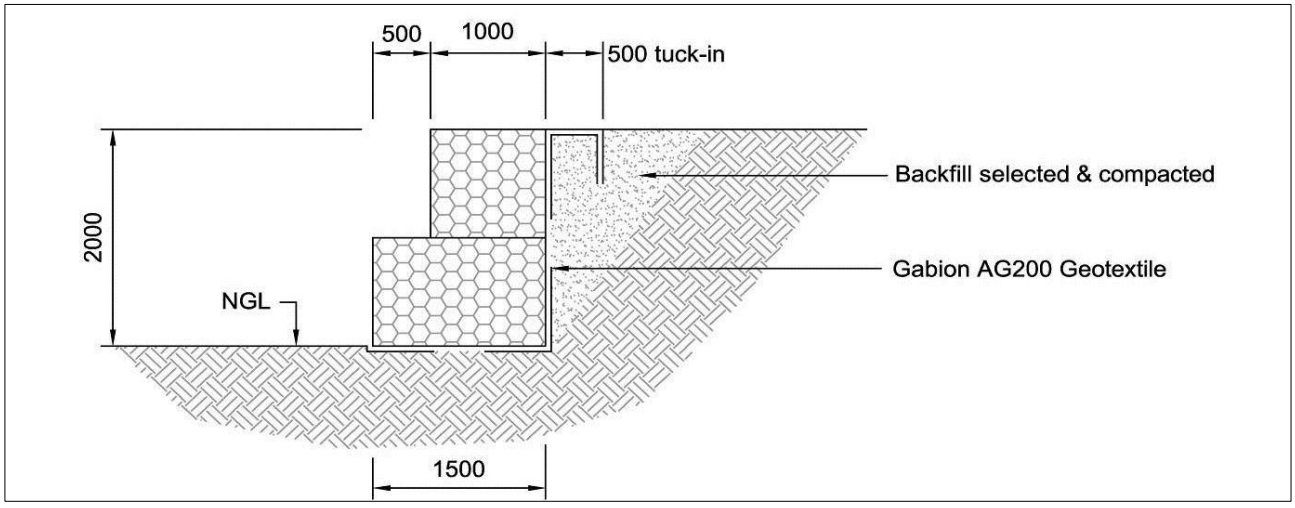

Figure F.16: Schematic sketch for layout of gabion wall

Note: No single gabion cage will be longer than 4m.

Use double twist hexagonal woven mesh according to SANS 1580 specifications: use galvanised mild steel wire.

Stone filling can be rock from the surrounding environment, primary crusher run, or obtained from an approved source as indicated by the Employer or Technical Specification related to the specific project.

Backfill material behind structures and below structures to be compacted to a minimum of 98% MOD AASHTO. A G200 geotextile to be used at all mesh / soil interfaces.

10.3 Light systems

These systems include silk screens (van Heerden 2000) erosion control blankets, turf reinforcement mats and geocells. The re-establishment of vegetation is also encouraged by using soil reclamation rolls (SRR), EcoLogs or seeded coir mats.

ESKOM COPYRIGHT PROTECTED

When downloaded from the WEB, this document is uncontrolled and the responsibility rests with the user to ensure it is in line with the authorized version on the WEB.

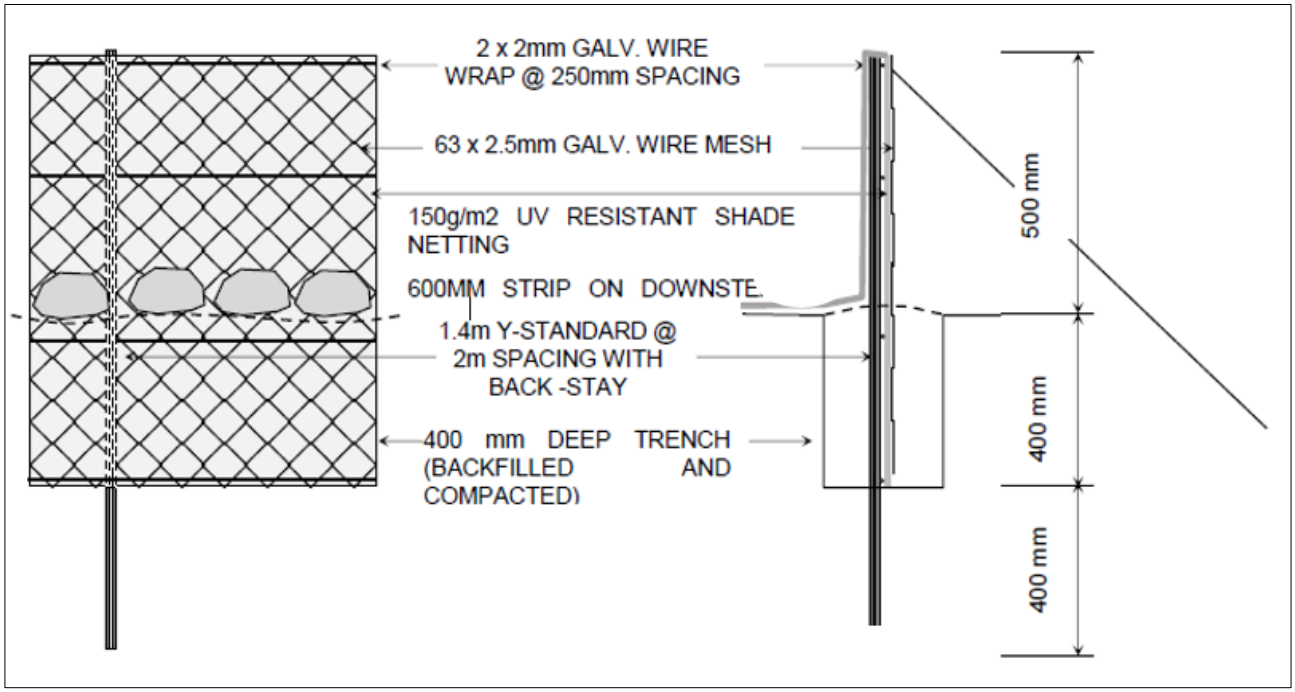

Figure F.17: Silt Screen used for rehabilitation of eroded areas

11. References

- Matthee, J F and Van Schalkwyk, C J, A Primer on soil conservation - Department of Agriculture publication- 2001
- Eskom Specification, Environmental Impact Control (EIC/385) , Eskom-Transmission , March 1985
- Eskom Specification, Environmental Impact Management Program (ESKPVAAZ1), Eskom-Transmission , Jan 2000
- Eskom Specification, Transmission Line Towers and Line Construction (TRMSCAAC1 rev.3) , Eskom-Transmission , March 2001
- Eskom Publication, The fundamentals and practice of Overhead line Maintenance, Power series vol.2, 2002
- Determination of longitudinal grades on rural roads, Polus, et. al., Israel Institude of technology, 1995
- Eskom Transmission Guideline -Soil Erosion Guideline, 41-337, 2010

ESKOM COPYRIGHT PROTECTED

When downloaded from the WEB, this document is uncontrolled and the responsibility rests with the user to ensure it is in line with the authorized version on the WEB.

Annex G – Corrosion coating classifications for hot drop galvanising

Coating classifications (CC) indicate the mean coating thickness described in SANS 121 (ISO 1461). The table below expands on SANS 121 to include medium and heavy-duty coatings and their requirements. This table should be used in the same manner as table 3 in SANS 121 (ISO 1461) when inspecting coating thickness. The thickness description next to the coating classification describes the mean coating thickness expected on members > 6mm and is used to refer to a certain coating classification.

Light Duty - 85 µm

Medium Duty - 105 µm

Heavy Duty - 140 µm

Table G.1: Minimum coating thickness and mass specified in the design of the steel members too be

Article and its thickness	CC	Local coating thickness (µm)	Local coating mass (g/m^2)	Mean coating thickness (µm)	Mean coating mass (g/m^2)
Steel > 6mm	Light	70	505	85	610
	Medium	90	648	105	755
	Heavy	125	900	140	1008
Steel > 3 mm to ≤ 6 mm	Light	55	395	70	505
	Medium	73	525	88	633
	Heavy	110	792	125	900
Steel ≥ 1.5 mm to ≤ 3 mm	Light	45	325	55	395
	Medium	54	389	69	497
	Heavy	95	684	110	792
Coatings ≥ 6 mm	Light	70	505	80	575

Table G.2: Minimum coating thickness and mass specified for fasteners to be achieved

Article and its thickness	Local coating thickness (µm)	Local coating mass (g/m^2)	Mean coating thickness (µm)	Mean coating mass (g/m^2)
Articles with threads:				
> 6mm diameter	40	285	50	360
Other articles (Including castings)				
≥ 3 mm	45	325	55	395

ESKOM COPYRIGHT PROTECTED

When downloaded from the WEB, this document is uncontrolled and the responsibility rests with the user to ensure it is in line with the authorized version on the WEB.

Annex H – Guy foundation Link Plates

Guy anchor links shall be manufactured with filleted edges in the hole for the guy attachment if a U-bolt attachment is used and a straight hole if a shackle is used. The rounded fillet radius should match the radius of the U-bolt to ensure no point contacts. Chamfered edges will create multiple point contacts and is not allowed.

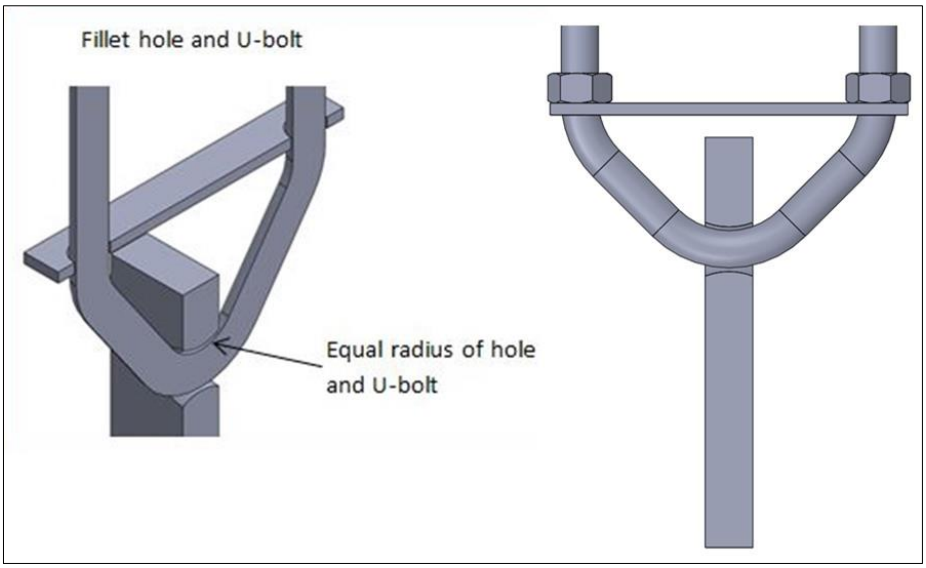

Figure H.1: Guy Foundation Link Plates - Fillet Hole and U-Bolt

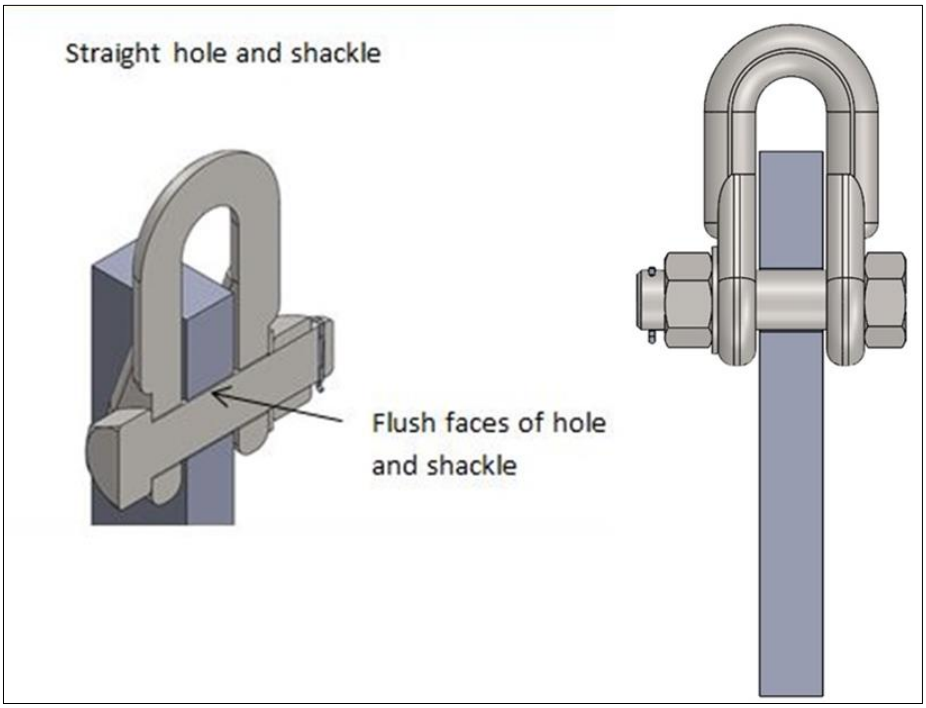

Figure H.2: Guy Foundation Link Plates - Straight Hole and U-Bolt

ESKOM COPYRIGHT PROTECTED

When downloaded from the WEB, this document is uncontrolled and the responsibility rests with the user to ensure it is in line with the authorized version on the WEB.