BILL OF MATERIALS

ITEM	QTY	DESCRIPTION	MATERIAL
1		SHEAR PIN	CARBON STEEL GRADE:080M40
2		137mm INDICATOR PIN	MILD STEEL
3		34mm INDICATOR PIN	MILD STEEL
4		PLUG	MILD STEEL

▽ = 3.2 um Ra
▽▽ = 1.6 um Ra
▽▽▽ = 0.4 um Ra

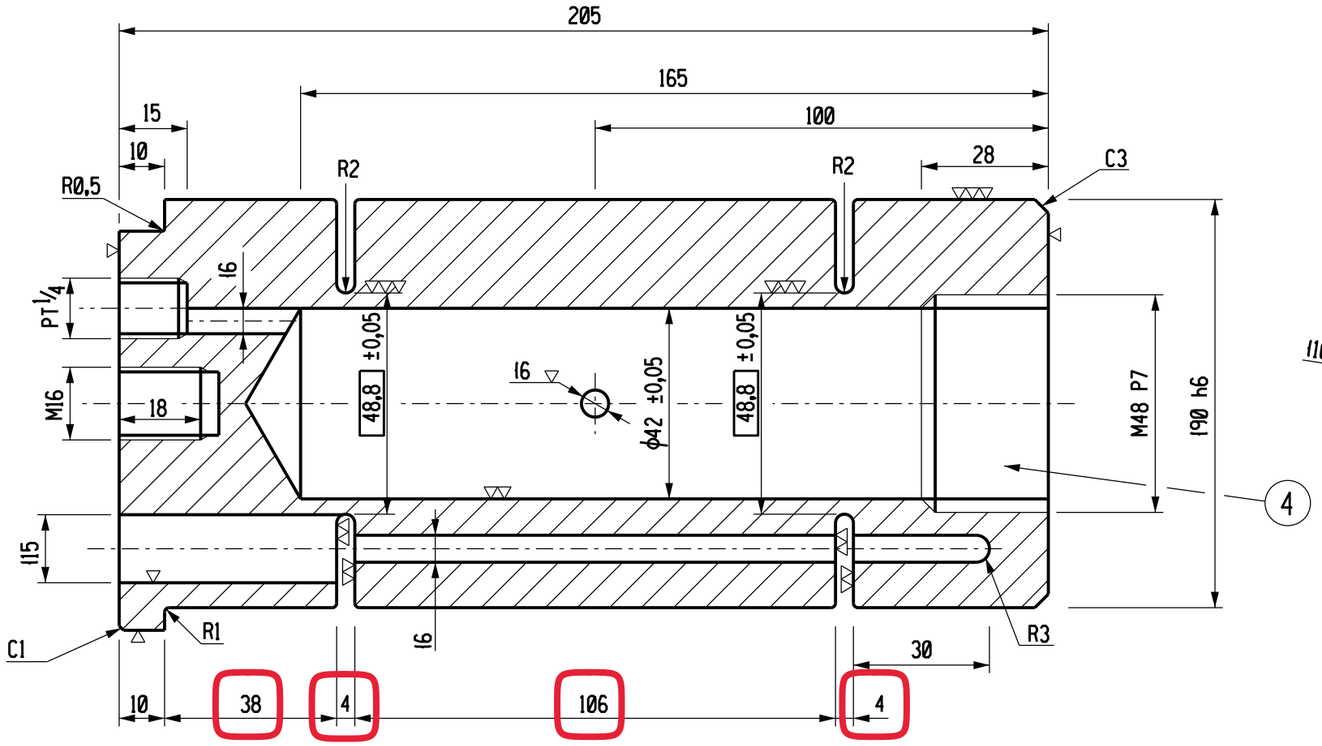

SECTION A-A

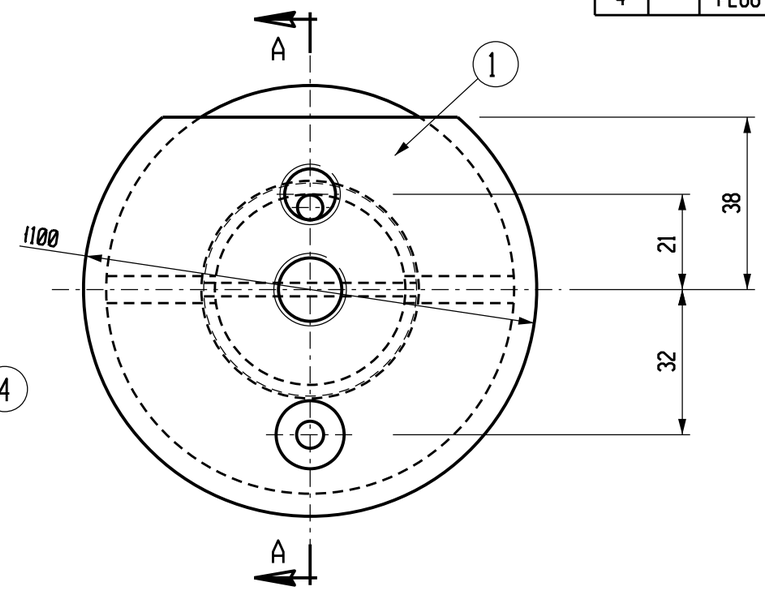

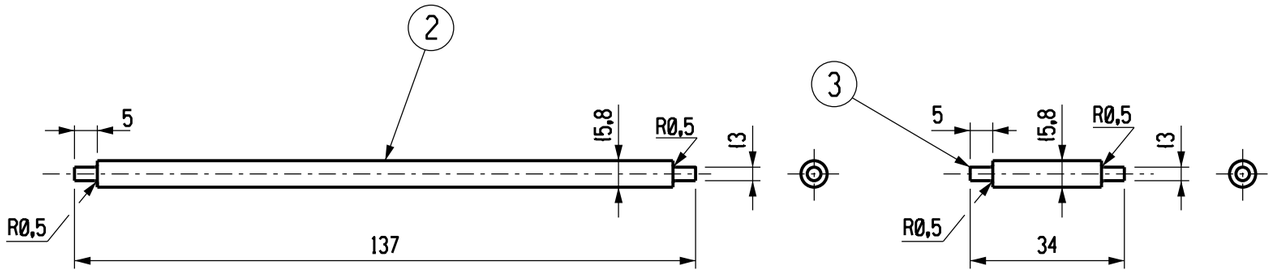

INDICATOR PINS

NOTE:

1.) THE DIMENSION IN ☐ SHOULD BE DECIDED FINALLY SO AS TO GIVE THE BREAKING STRENGTH OF 43,500 Kg ON THE BASE OF SHEARING STRENGTH OF THE MATERIAL SHOWN AT MOCK-UP TEST.

2.) THE DIMENSION SHOWN IN ☐ IS FOR CONVENIENCE OF MACHINNING TEST PIECES , SUPPOSING THAT THE MATERIAL MAY SHOW SHEARING STRENGTH OF 45 Kg/mm A? MOCK-UP TEST.

3.) ALL SHARP EDGES TO BE ROUNDED SMOOTHLY.

4.) ITEM 2 IS NOT FOR MANUFACTURE BUT INCLUDED FOR ASSEMBLY PURPOSES ONLY.

D.O.	REV	DATE	INDEX REFERENCE :	REV BY	CHKD BY	AUTH BY	APPR BY	38/ REFERENCE DRAWINGS
18	1	2007-11-23	INDICATOR PINS ADDED , CENTRE HOLE REVISED TO M16 AND GREASE HOLE MOVED 90(AS PER DEV No.GRP774 . AND MOD No's 250,251,252,253	R.A.	F.K.	M.VAN ROOYEN	P.NEL	
00	0		DEV. 56/98 FIRST ISSUE					

DRG REGISTR		
KKS APP		
AUTH BY	12 08 98	D.J
CHKD BY	12 08 98	JAC
DRAWN BY	10 06 98	B.M.M.
SCALE	1:1	

ESKOM

GARIEP POWER STATION
UNITS 1-4
MAIN MACHINE SET
GOVERNOR SYSTEM (MEX)
SHEAR PIN
MANUFACTURING DETAIL

APPROVED BY : D.JOHNSON
DATE : 12 08 98

18.38/3484

REV 1

AS BUILT & APPROVED AS PER REVISION 1
APPROVED BY: R. ABRAHAMS
APPROVED DATE: 2007-11-23